SONDERMANN
PUMPEN • FILTERTECHNIK

MAGSON

magnetically coupled centrifugal pumps
MA types 4 to 7
Operating Manual

Table of contents

1. Declaration of conformity 4

2. Basic information 6

2.1 Notes on the operating manual 6
2.2 Validity of data 6
2.3 Purpose 6
2.4 Use to the intended purpose 6
2.5 Anticipated misuse 7
2.6 Limits of use 7
2.7 Warranty and liability 7
2.8 Contact details 7

3. Safety 8

3.1 Standards and directives 8
3.2 Depiction of safety instructions 9
3.3 Symbols used 9

4. Technical Information 10

4.1 General description 10
4.2 Nameplate 10
4.3 Type codes and materials 10
4.4 Structure of MAGSON MA pumps 12

5. Transport and temporary storage 13

5.1 Safety instruction 13
5.2 Transport 13
5.3 Temporary storage 13

6. Installation 14

6.1 Safety precautions 14
6.2 Installation requirements 14
6.3 Installation 14
6.3.1 Hose and pipe lines 14
6.3.2 Suction line 15
6.3.3 Discharge line 15
6.3.4 Flange or threaded connections 16

6.3.5 Electrical connection 17
6.3.6 Controlling the direction of rotation 18

7. Putting into operation 19

7.1 Safety precautions 19
7.2 Preparatory work 19
7.3 Putting into operation 19
7.4 Possible malfunction when putting the pump into operation 20

8. Shut-down procedure 21

9. Service and maintenance 22

9.1 Safety precautions 22
9.2 General information 22
9.3 Preventive maintenance 23
9.3.1 Overall pump 23
9.3.2 Wearing parts 23
9.3.3 Motor 24
9.3.4 Static O-ring seals 24
9.4 Dismantling and replacing the motor 25
9.5 Dismantling the pump head 25
9.6 Disassembling the pump head 26
9.7 Assembling the pump 26

10. Troubleshooting 28

Appendix 30

1. Declaration of conformity

EC Declaration of Conformity

pursuant to the EC Machinery Directive 2006/42/EC, Annex II 1. A

Manufacturer:

S O N D E R M A N N Pumpen + Filter GmbH & Co. KG
August-Horch-Str. 2
D - 51149 Köln

CE

Description and identification of the machine:

Product:	Centrifugal pump
Type:	MAGSON
Trade name:	Magnetically coupled (self-priming) centrifugal pump,in horizontal alignment
Function:	Pumps of the MAGSON series are designed to operate as centrifugal pumps and are used to pump liquids.

It is explicitly stated that the machine corresponds to all relevant provisions of the following EC Directives:

2006/42/EC	Directive 2006/42/EC of the European Parliament and the European Council from 17 May 2006 concerning machinery and the amendment to the 95/16/EC Directive (new version) (1)
2014/30/EU	Directive 2014/30/EU of the European Parliament and of the Council of 26 February 2014 on the harmonisation of the laws of the Member States relating to electromagnetic compatibility (recast)

Source of applied harmonised standards according to Article 7 Paragraph 2:

Type A standard

EN ISO 12100:2010-11	Safety of machinery - General principles for design - Risk assessment and risk reduction (ISO 12100:2010)
Type B standard	EN ISO 13732-1:2008 Ergonomic of the thermal environment – Methods for the assessment of human responses to contact with surfaces – Part 1: Hot surfaces (ISO 13732-1:2008)
EN 1032:2003+A1:2008	Mechanical vibration – Testing of mobile machinery in order to determine the vibration emission value
EN 60204-1:2006/AC:2010	Safety of machinery – Electrical equipment of machines – Part 1: General requirements

Type C standard

809:1998+A1:2009/AC:2010	Pumps and pump units for liquids – Common safety requirements

Standard

EN 61000-6-4:2007/A1:2011	Electromagnetic compatibility (EMC) - Part 6-4: Generic standards; Emission standards for industrial environments
EN 61000-6-2:2005/AC:2005	Electromagnetic compatibility (EMC) - Part 6-2: Generic standards - Immunity for industrial environments
EN 60034-1:2010/AC:2010	Rotating electrical machines – Part 1: Rating and performance
EN 60034-5/A1:2007-01	Rotating electrical machines – Part 5: Degrees of protection provided by the integral design of rotating electrical machines (IP Code) – Classification
EN 60034-6:1993-11	Rotating electrical machines – Part 6: Methods of cooling (IC Code)
EN 60034-9/A1:2007-04	Rotating electrical machines – Part 9: Noise limits

Cologne, 09.01.2017

SONDERMANN
PUMPEN + FILTER GMBH & Co. KG

Klaus Hahn
Geschäftsführer

2. Basic information

2.1 Notes on the operating manual

This operating manual has been prepared to meet all product-specific and user-related requirements of the law and of all relevant regulations and rules, technical standards, directives and agreements.

The manual includes important information on the functioning of MAGSON magnetically coupled centrifugal pumps and how to use, install, service and dispose of them.

In the following, the magnetically coupled centrifugal pumps are referred to as “pump”.

Before putting the pump into operation, carefully read the operating manual and make sure that it is always ready at hand to all users of the pump.

Complying with all instructions of this operating manual is an essential prerequisite to guarantee the safe operation and maintenance of the pump.

Make sure that all operators and service technicians have fully read and understood the manual before they start working at or with the pump.

2.2 Validity of data

All technical data, dimensions and indications of weight etc. were valid at the day when this manual went to press. Specifications listed here may differ from the actual design of the pump but will not modify any relevant information in principle.

2.3 Purpose

MAGSON pumps are designed to function as centrifugal pumps delivering fluids.

2.4 Use to the intended purpose

MAGSON pumps must only be used to deliver fluids of watery viscosity without coarse solids. So the fluids meant to be delivered are

- water and aqueous solutions,
- acids,
- bases,
- similar fluids free of magnetizable metal particles.

Do not use the pump to deliver

- inflammable or explosive fluids,
- solids-bearing or abrasive fluids,
- fluids being used to process food because the pump has not been certified according to FDA or EC 1935/2004 standards.

If you want to deliver solids-bearing or abrasive fluids, please contact the pump’s manufacturer.

2.5 Anticipated misuse

The pump is misused if

- it is used other than to the intended purpose;
- it is operated beyond its defined limits;
- it is used to deliver inadmissible fluids like fluids containing magnetizable metal particles or coarse contaminants, for example.

2.6 Limits of use

Dimensional limits

For dimensions of the pump see æ Dimensioned drawings in the Appendix page 30 foll.

For technical data of the pump see æ Appendix page 30 foll.

Other limits

Ambient temperature	0 to 40°C for PP; -20 to ±40°C for ETFE

Pumps made of PP must not be operated in frost because PP will embrittle at temperatures below 0°C.

2.7 Warranty and liability

The pump must only be used to the intended purpose specified by this operating manual. Inappropriate operation or insufficient service and maintenance will cancel the right to all warranty claims.

2.8 Contact details

SONDERMANN
Pumpen + Filter GmbH & Co. KG

August-Horch-Strasse 2
51149 Cologne (Porz), Germany

Phone: +49(0)2203 93940
Fax: +49(0)2203 939 448

info@sondermann-pumpen.de
www.sondermann-pumpen.de

3. Safety

3.1 Standards and directives

Name	Contents
2006/42/EG	Directive 2006/42/EC of the European Parliament and of the Council of 17 May 2006 on machinery, and amending Directive 95/16/ECG (recast) (1)
2014/30/EU	Directive 2014/30/EU of the European Parliament and of the Council of 26 February 2014 on the harmonisation of the laws of the Member States relating to electromagnetic compatibility (recast)

Table 1: European Directives

Name	Contents
EN ISO 13732-1:2008	Ergonomics of the thermal environment — Methods for the assessment of human responses to contact with surfaces – Part 1: Hot surfaces (ISO 13732-1:2008)
EN 1032:2003+A1:2008	Mechanical vibration - Testing of mobile machinery in order to determine the vibration emission value
EN 61000-6-4:2007+ A1:2011	Electromagnetic compatibility (EMC) - Part 6-4: Generic standards - Emission standard for industrial environments
EN 61000-6-2:2005/ AC:2005	Electromagnetic compatibility (EMC) - Part 6-2: Generic standards - Immunity for industrial environments
EN 809:1998+A1:2009 + AC:2010	Pumps and pump units for liquids - Common safety requirements
EN ISO 12100:2010-11	Safety of machinery – General principles for design - Risk assessment and risk reduction (ISO 12100:2010)
EN 60204-1:2006/ AC:2010	Safety of machinery - Electrical equipment of machines - Part 1: General requirements
EN 60034-1:2010/ AC:2010	Rotating electrical machines - Part 1: Rating and performance
EN 60034-5/A1:2007-01	Rotating electrical machines - Part 5: Degrees of protection provided by integral design of rotating electrical machines (IP code) – Classification
EN 60034-6:1993-11	Rotating electrical machines - Part 6: Methods of cooling (IC code)
EN 60034-9/A1:2007-04	Rotating electrical machines - Part 9: Noise limits

Table 2: EN Standards

3.2 Depiction of safety instructions

All safety instructions of this document are marked with symbols designed on the basis of the SAFE principle. Each of them describes the kind and source of danger, possible consequences and information on how to avert them.

DANGER

The symbol warns you of a potential accident resulting from ignoring safety or other instructions. The accident will cause serious and maybe even mortal injuries or death when touching a high-voltage electrical equipment, for example.

WARNING

The symbol warns you of a potential accident resulting from ignoring safety or other instructions. The accident may cause serious and maybe even mortal injuries or death when touching a high-voltage electrical equipment, for example.

CAUTION

The symbol warns you of a potential accident resulting from ignoring safety or other instructions. The accident may cause slight injuries like burns, injuries of the skin and bruises, for example.

ATTENTION

The symbol warns you of a potential material damage.

NOTE

The symbol indicates an important information.

3.3 Symbols used

Symbol	Meaning
æ	Cross-reference such as “see chapter xx“, “see page yy“

Table 3: Symbols used

4. Technical Information

4.1 General description

MAGSON magnetically coupled centrifugal pumps are non-self priming centrifugal pumps made of plastic and built in horizontal single-stage monoblock design. A magnetic coupling connects the pump to the motor and transmits the power of the motor to the impeller.
Pump housings, impellers, inner magnet sheaths and rear casings are made of plastic. The rear casing hermetically seals the fluid from the ambient atmosphere. Because of magnetic power transmission, there is no need to mechanically seal the shaft. So, in contrast to mechanically or gland sealed pumps, any leakage at the shaft is completely impossible.

4.2 Nameplate

The nameplate of the pump not only specifies its operating data but also its type and serial number. Please indicate all these data when making an inquiry, reordering parts and, in particular, when ordering spare parts.

Data of the electric motor are given on a separate rating plate.

For further information, contact your pump's supplier or the manufacturer.

4.3 Type codes and materials

The type code on the nameplate informs you about the pump materials in contact with fluid.

• Standard (off the shelf) o possible configuration – not available

Component		Housing, rear casing, impeller		O-ring of housing				Bearing				Shaft and starting rings **			Size	Motor capacity	Motor		Power supply frequency	
	Material	PP (glass-fibre reinforced *)	ETFE (carbon-fibre reinforced)	FKM	EPDM	FEP-coated FKM	Specific design (e.g. FFKM)	SiC with ETFE bushing	Carbon	Alumina	PTFE	Alumina	SiC	Specific design	Max. delivery head / max. volume flow see technical data on pages 12 to 25	Motor capacity (kW) see technical data on pages 12 to 25	for 230V single-phase AC	for 230/400 and 400/690V three-phase AC	50Hz	60Hz
MA	BG2	•	•	•	•	o	o	–	–	–	•	•	–				•	•	•	o
MA	BG3	•	•	•	•	o	o	–	–	–	•	•	–				•	•	•	o
MA	BG7	•	–	•	•	o	o	•	o	o		•	o					•	•	o
MA/MAS	BG4/4H	•	•	•	•	o	o	•	o	o		•	o				•	•	•	o
MA/MAS	BG5/5H	•	•	•	•	o	o	•	o	o		•	o					•	•	o
MA/MAS	BG6/6H	•	•	•	•	o	o	•	o	o		•	o					•	•	o
	Code	P	E	F	E	P	X	S	C	K	P	K	S	X			1	3	5	6

For example: MA — P — F — S — K — 8/160 – 0,37 — 1 — 5

* Sheath of inner magnet without fibre reinforcement ** Starting ring of impeller: CFR-PTFE (types 3 to 6)

Overview of available materials being in contact with fluid:

Component	Symbol	Material	Temperature
All components in contact with fluid	PP	Polypropylene	0 to 70°C
	ETFE	Ethylene tetrafluoride ethylene	-20 to +100°C
	PTFE	Polytetrafluoroethylene	-20 to +100°C
	CFR-PTFE	Carbon fiber reinforced polytetrafluoroethylene	-20 to +100°C
	PPS	Polyphenylene sulphide	-20 to +100°C
	SIC	Silicon carbide	-20 to +100°C
	Alumina	Aluminium oxide ceramic (99.7%)	-20 to +100°C
Seals	EPDM	Ethylene-propylene-diene rubber	-20 to +100°C
	FKM	Fluorinated rubber	-20 to +100°C
	FEP	FEP-coated FKM	-20 to +100°C

NOTE

Pump housings made of PP are of dark blue colour.

Pump housings made of ETFE are of black colour and marked with a yellow

sticker.

WARNING

Danger of chemical non-resistance of components

Make sure that the materials used for making the pump are resistant to the fluid(s) delivered.
Chemical non-resistance may result in leakage of fluid.
Potential danger to the environment and health.
In case of doubt, please contact the pump's manufacturer.

NOTE

For the chemical resistance of materials, please request the material resistance list of the pump's manufacturer.

4.4 Structure of MAGSON MA pumps

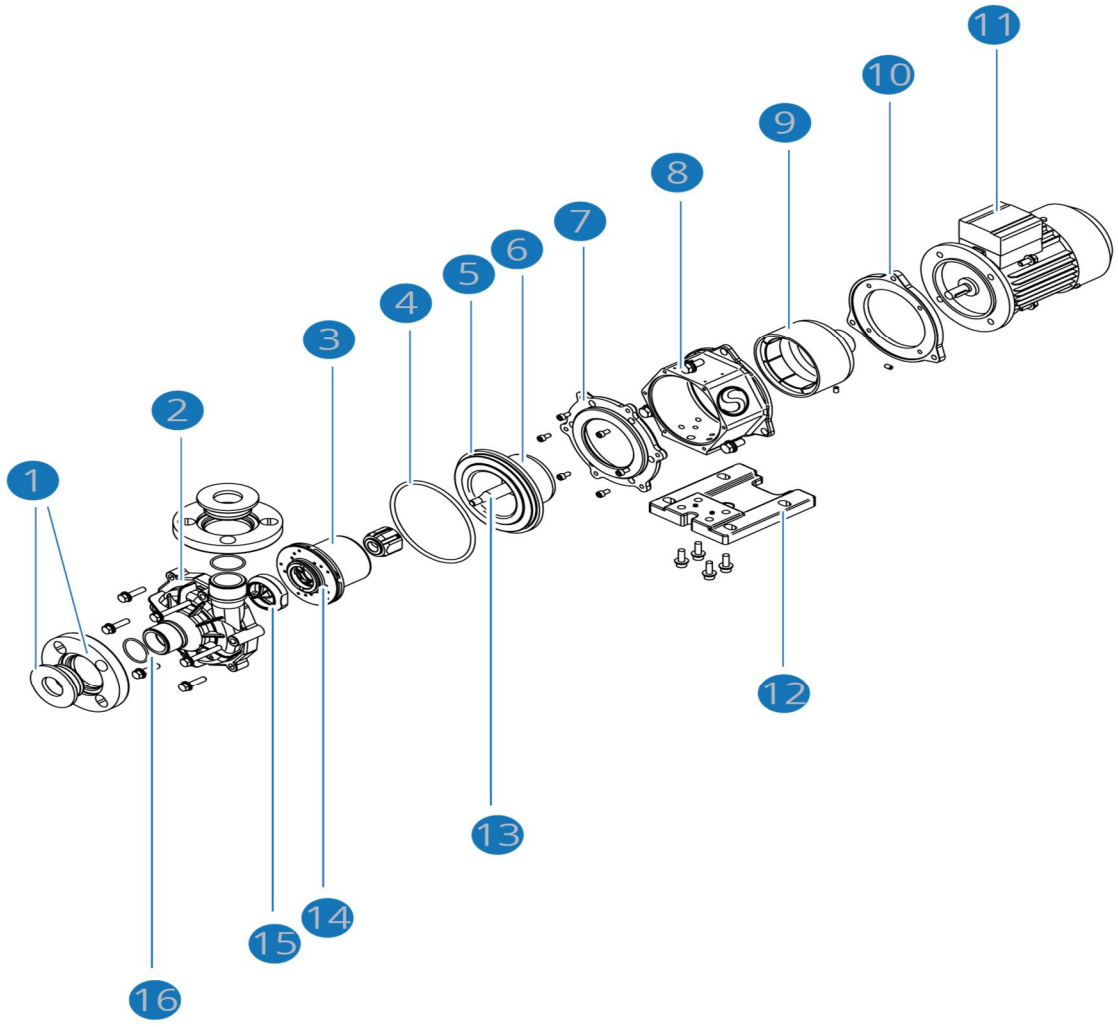

Fig. 1: Structure of an MA pump of type 4

1	Slip-on flange	2	Pump housing
3	Impeller magnet	4	O-ring of housing
5	Rear casing	6	Starting ring of rear casing
7	Mounting flange	8	Lantern
9	Driving magnet	10	Adapter plate (types 4 and 6 only)
11	Motor	12	Base plate
13	Centering axis	14	Impeller starting ring
15	Shaft mounting	16	O-ring of flange

The figure shows an MA pump of type 4. The structure of other types may differ, see the spare-parts drawing of the Appendix.

Overview of MAGSON MA pump types

MA non self priming	Size	Suction port	Discharge port
Type 2	7/70	G 1 ½“	G 1 ½“
	8/80		
Type 3	15/40		
	10/100		
	13/120		
Type 4	8/160	DN40	DN40
	10/180		
	12/190		
	14/220		
Type 5	10/240		
	13/260		
	15/280		
	18/320		
Type 6	22/400	DN50	
	26/450		
	29/470		
	30/510		
Type 7	29/950	DN65	DN50
	36/750		
	42/500		

5. Transport and temporary storage

5.1 Safety instruction

WARNING

Danger of getting jammed or bruised during transport of the pump

Make sure to use lifting devices suitable to the weight of the pump.
Do not remove the lifting device before you have put down the pump safely.

5.2 Transport

1. Unpack the pump or unit upon receipt and check it for damage in transit.
2. In case of damage in transit, make sure to have the carrier draw up and sign the damage report document.
3. Make sure that the information of the nameplate corresponds with the specifications and dimensions of the purchase order.
4. The packaging material has to be disposed of according to local regulations.

5.3 Temporary storage

The pump must only be stored at a dry place free of frost. When storing the pump, protect it against any contaminants getting in.

6. Installation

6.1 Safety precautions

WARNING

Danger of getting jammed or bruised during installation of the pump

If necessary, use lifting and holding devices suitable to the size and weight of the pump.
Make sure that all installation work is done by competent and qualified personnel only.

WARNING

Danger of being hit by falling components

If necessary, use lifting and holding devices suitable to the size and weight of the pump.
Make sure that all installation work is done by competent and qualified personnel only.

6.2 Installation requirements

Install the pump at a place that allows you easy access at any time. The limit values of the ambient temperature are as follows: 0 to +40°C for pumps of PP;
-20 to +40°C for pumps of ETFE.

6.3 Installation

1. Install the pump in a horizontal position. For any other installation position, please contact the manufacturer.
2. Note: As the pump is non-self priming, it has to be supplied.
3. Make sure that the pump does not draw in impurities when priming.

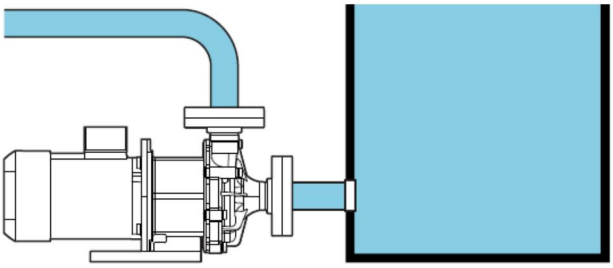

Remove all covers and caps from the flanges before installing the pump.

6.3.1 Hose and pipe lines

1. All pipe line diameters should be sufficiently large. The flow rate of the suction line should be between 1 and 2m/s, that of the discharge line should not exceed 3m/s. Pipe line diameters have to be at least the size of the suction and discharge ports.
2. All suction and discharge lines to the pump housing should be free of tensile stress.
3. If necessary, install expansion joints at the pipe lines to compensate excessive tension due to the pipe's thermal expansion.
4. Avoid bending radii of less than 1.5 times the nominal pipe size.
5. Also avoid sharp changes in diameters within the piping.

6.3.2 Suction line

ATTENTION

Risk of damaging the pump by cavitation

When installing the suction line, make sure to meet the NSPH value given in the æ Appendix page 30 foll.. If the NPSH falls below this value, there will be cavitation resulting in running noise, drumming and vibration of the pump.
We do not provide warranty for any damage to the pump caused by cavitation!

1. The suction pipe or hose should be made of a material that will not deform or distort by vacuum or higher temperatures.
   The suction line also should be as short as possible, its installation preventing any gas accumulation.
2. When dimensioning pipelines, fittings etc., make sure to keep the flow resistances as low as possible.
3. Provide for a straight steadying section of at least 5 times the nominal diameter before the suction port.
4. Suction lines have to be vacuum-sealed because penetrating air causes malfunction and may result in damage to the pump.
5. Make sure that the flow rate in the suction line installed does not exceed 1m/s.
6. Protect the pump against dry-running by installing adequate equipment (optionally available).
7. For easy installation and removal of the pump, a shut-off valve (but no diaphragm valve) should be built into the suction line.

NOTE

Do not use the shut-off valve of the suction line to adjust the delivery rate!

6.3.3 Discharge line

Standard flow rate of the discharge line is 3m/s.

We recommend installing a control element to adjust the flow rate of the discharge line.

ATTENTION

Damaging of the pump housing by pressure jerks

Do not install any quick-acting stop valves to the pipelines!

To measure working conditions, you better install a manometer between the discharge port of the pump and the throttle valve as well as a volume flow meter, if necessary.

6.3.4 Flange or threaded connections

MAGSON MA pumps of types 4 to 6 are equipped with slip-on flanges as standard features. The rotating flange allows you to easily connect the pump without considering the angular position of the mating flange. Do not use hard material to seal the flange but appropriate elastomer seals.

MAGSON MA types 7 are equipped with loose flange but cannot be disassembled.

Replacing a flange by a threaded adapter

Alternatively you can use an insert fitting and spigot nut to connect the pump.
To do so, you have to replace the screwed flange by the attached threaded adapter as follows:

1. Take the slip-on flange off the flange fixture using a rubber mallet.

2. Use a strap wrench to unscrew the flange fixture. Take the O-ring off the fixture and put it into the (inner thread) of the threaded adapter.

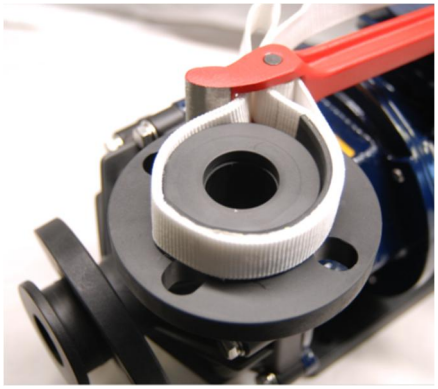

3. Screw the threaded adapter to the pump housing using the strap wrench. Make sure that the O-ring fits exactly into the groove of the inner thread.

6.3.5 Electrical connection

NOTE
Qualified personnel only are allowed to connect the pump to the electrical mains.
All electrical connections and the installation of additional protection devices has to be done in accordance with the regulations of your local power supplier and the VDE Association of German Electrical Engineers.

Before working on the terminal box of the pump, the power supply must have been cut off for at least 5 minutes.

1. Make sure that the power supply available corresponds to the data of the nameplate.
2. Connect the motor according to the following schematic attached to the terminal box:

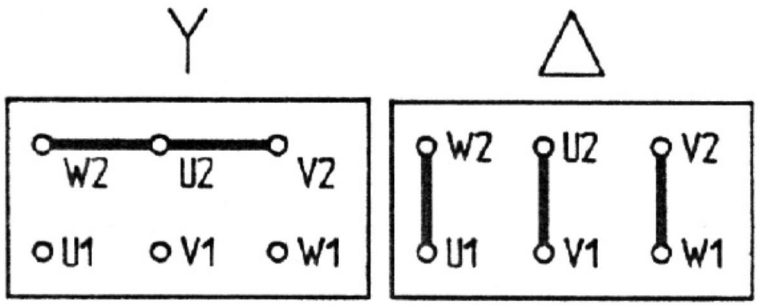

3. As standard features, all three-phase AC motors have PTC resistors to monitor the winding temperature. To operate the pump with frequency converter, also connect the PTC resistors.
4. All AC motors have a thermal sensor as standard feature which also has to be connected.
5. Do not operate any AC motor without circuit-breaker!

NOTE
Please ask the manufacturer for additional motor protection devices.

6.3.6 Controlling the direction of rotation

ATTENTION

Dry-running will damage the pump

Do not check the direction of rotation when there is no fluid in the pump!

1. Mind the direction of rotation indicated by an arrow on the pump. Before verifying it after the installation, fill the pump housing and suction line with water or fluid.
2. Then switch on and immediately off the motor to check the direction of rotation. To check whether the direction of rotation corresponds to the direction indicated by the arrow, push a piece of soft material like paper or cable tie into the slots of the fan cowl.
3. If necessary, exchange 2 phases at the terminal box to reverse the direction of rotation.

7. Putting into operation

7.1 Safety precautions

WARNING

Danger of breaking during operation

Regularly check the pump for damages.

If there is a damage, the pump must not be operated!
Replace wearing parts at regular intervals.
Do not operate the pump to other than the intended purpose.

WARNING

Risk of electrical hazards when touching parts carrying voltage by fault

Fasten all loose connections. Immediately replace defective cables.
Always disconnect the power supply before doing any electrical work.
Cables must neither be jammed nor squeezed. When laying cables and connections make sure you cannot trip over them and they won't be damaged.
Check all electrical equipment at regular intervals according to the locally valid regulations (like the German DGUV accident prevention regulation 3, for example).
Only qualified and authorized personnel are allowed to do any work at the electrical equipment.

7.2 Preparatory work

WARNING

Danger of injuries and intoxication by fluid squirting out

Always wear personal protective equipment when working at the pump.

NOTE

We recommend installing dry-running protection devices such as flow monitors, contact manometers, differential pressure switches or level controllers.

1. Fill the pump housing and the suction line with water or fluid.
   It is absolutely necessary to avoid any dry-running of the pump!
2. Make sure that all flange screws are tight. Fasten all screwed connections.
3. Open the suction and discharge valves to fill the pump with fluid. Fully open all shut-off valves of the suction line. Fill up the pump with fluid and deaerate it.

7.3 Putting into operation

1. Switch on the motor.
2. Slowly open the shut-off valve of the discharge side to adjust the operating point. If there is no shut-off valve installed to the discharge line, the operating point is automatically adjusted in accordance with the characteristic curve of the pump.

ATTENTION

Overheating will damage the pump!

Do not run the pump with the discharge line closed for a longer period of time. This may result in heating up the fluid inside the pump housing and damaging interior components of the pump.

WARNING

Hazard of pressure

Use a manometer at the discharge line to check the system pressure and prevent it from going beyond its limit specified in the technical data sheet (see Appendix).
If the system pressure is too high, the rear casing may burst releasing fluid.
When pressure testing the piping, take into account the maximum system pressure, but do not test the pump as well, if possible.

3. Check all screw joints and union pieces of the piping system for leakage.
4. Check the pump for vibration. Excessive vibration suggests cavitation or foreign particles in the impeller (see æ chapter 10: Troubleshooting).
5. Make sure that the power input of the motor is less than or equal to the rated current given on the motor's nameplate.
   If the power input is too high, reduce the delivery rate of the pump at the discharge side or decrease the density of the fluid, if possible.

7.4 Possible malfunction when putting the pump into operation

If the motor circuit-breaker switches off the motor, proceed as follows:

1. Before switching on the motor again, check whether the impeller turns readily.
2. Make sure that the suction line and the pump housing are filled with fluid.
3. Switch on the motor.

If the pump delivers for a short period of time only and then stops pumping, the magnetic coupling has been overloaded and disengaged. In this case, follow the instructions of æ chapter 10: Troubleshooting (see page 28).

8. Shut-down procedure

1. Switch off the motor.
2. Close the shut-off valves.
3. When some fluid remains within the pump, secure the shut-off valves to prevent an accidental opening.
4. In case of crystallizing fluids, heat both the pump and the piping. Protect freezing fluids against frost.
5. If the pump will be out of operation for a longer period of time, thoroughly rinse it off with a clean and neutral liquid to prevent remaining fluid from depositing within the pump and at the sleeve bearings.
6. In case the pump is shut down for repair or maintenance work, lock the driving unit so that it cannot be switched on. Before dismantling the pump, shut off the suction and discharge lines and empty the pump housing under monitored conditions.

NOTE
Secure all valves to prevent an accidental opening!
Always wear personal protective equipment!

9. Service and maintenance

9.1 Safety precautions

WARNING

Risk of electrical hazards when touching parts carrying voltage by fault

Only qualified and authorized personnel are allowed to work on motors at a standstill. The motors have to be disconnected and secured against any accidental start.
Strictly follow the instructions of the motor manufacturer.
Comply with the safety rules for working on electrical equipment.

WARNING

Hazardous magnetic fields

The magnetic fields resulting from the pump's permanent-magnetic components will endanger persons with cardiac pacemakers.

WARNING

Danger of breaking during operation

Regularly check the pump for damages.

If there is a damage, the pump must not be operated!
Immediately replace the corrosion protection if it s damaged. Replace wearing parts at regular intervals.
Do not operate the pump to other than the intended purpose.

WARNING

Risk of electrical hazards when touching parts carrying voltage by fault

Fasten all loose connections. Immediately replace defective cables.
Always disconnect the power supply before doing any electrical work.
Cables must neither be jammed nor squeezed. When laying cables and connections make sure you cannot trip over them and they won't be damaged.
Check all electrical equipment at regular intervals according to the locally valid regulations (like the German DGUV accident prevention regulation 3, for example).
Only qualified and authorized personnel are allowed to do any work at the electrical equipment.

WARNING

Risk of getting into contact with dangerous substances

Before doing service and maintenance work that requires opening the pump, carefully clean the pump and rinse it off with a neutral fluid.

WARNING

Danger of faulty installation and use of wrong or inadmissible spare parts

Components should be only replaced with genuine parts or spare parts authorized by the manufacturer.

WARNING

Risk of getting into contact with hot surfaces

Before working on drive units, cool down the motors and actuators or wear heat-resistant protection gloves.

9.2 General information

This pump is designed for continuous operation and does not require specific maintenance. Nevertheless, we recommend to do the following preventive maintenance work.

9.3 Preventive maintenance

9.3.1 Overall pump

Check the pump at regular intervals for

1. vibrations or unusual noise,
2. a minimum volume flow of at least 5% of the maximum volume flow,
3. changes in normal operating conditions, overheating or dry-running,
4. leakage at the pump or piping,
5. cavitation in running,
6. open valves of the suction line and a clogged filter, if any.

9.3.2 Wearing parts

Though sleeve bearing, centering shaft and starting rings are designed for continuous operation, they are subject to wear and tear as well. So check the bearings for wear and deposits at regular intervals, and replace them, if necessary.

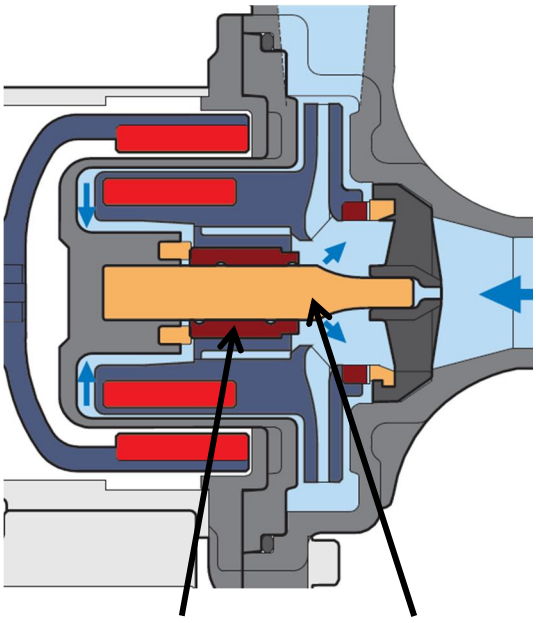

· The sleeve bearing and centering shaft should be replaced when they slack.

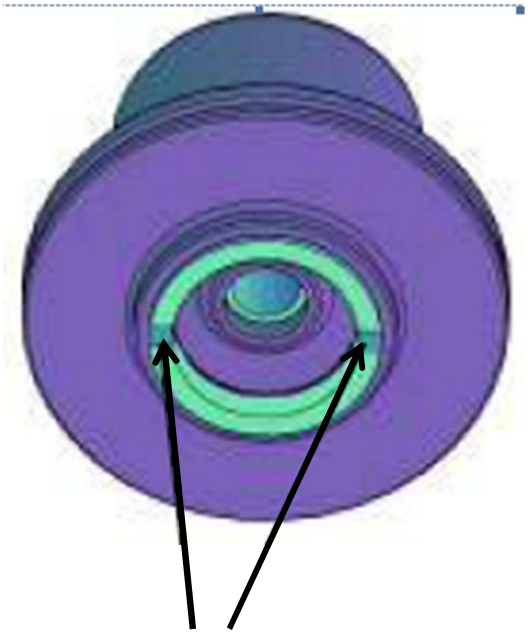

· The starting ring inside the impeller should be replaced once the grooves are no longer visible.

Impeller
Replace the impeller magnet as soon as you see signs of wear or corrosion.

Starting rings
Check them for fissures, cracks and wear.

Rear casing
Check it inside and outside for signs of wear.

O-ring
Replace the O-ring as soon as the elastomer shows signs of chemical attack, fissures or loss of elasticity.

NOTE
All spare parts are available at Sondermann Pumpen + Filter GmbH & Co. KG. See the Appendix for the spare parts lists.

When delivering dirty, muddy or crystallizsing fluids, you should check and clean the pump at shorter intervals.

9.3.3 Motor

1. Clean the fan cowl and cooling fins once a month.
2. Check the power input of the motor and compare it to the rated current given on the nameplate.

9.3.4 Static O-ring seals

1. Visually inspect the seals for signs of wear at regular intervals.
2. Replace the seal, if necessary.

NOTE
If not only wear parts are replaced, but also repair work has to be done, this should be performed by an expert only. Improper maintenance work often results in superfluous extra costs.

9.4 Dismantling and replacing the motor

The back pull-out design allows you to replace the entire drive unit without dismounting the pump. So neither the pump nor the piping have to be drained. Just loosen the 4 motor screws and pull the motor off the pump.

WARNING

Danger of strong magnetic forces and bruises

There are strong magnetic forces inside the pump between the inner magnet and the driving magnet. So pull out the drive unit with a jerk being careful not to be bruised. Perhaps you will want to work in pairs.

9.5 Dismantling the pump head

Before dismantling the pump head, drain and carefully rinse it.

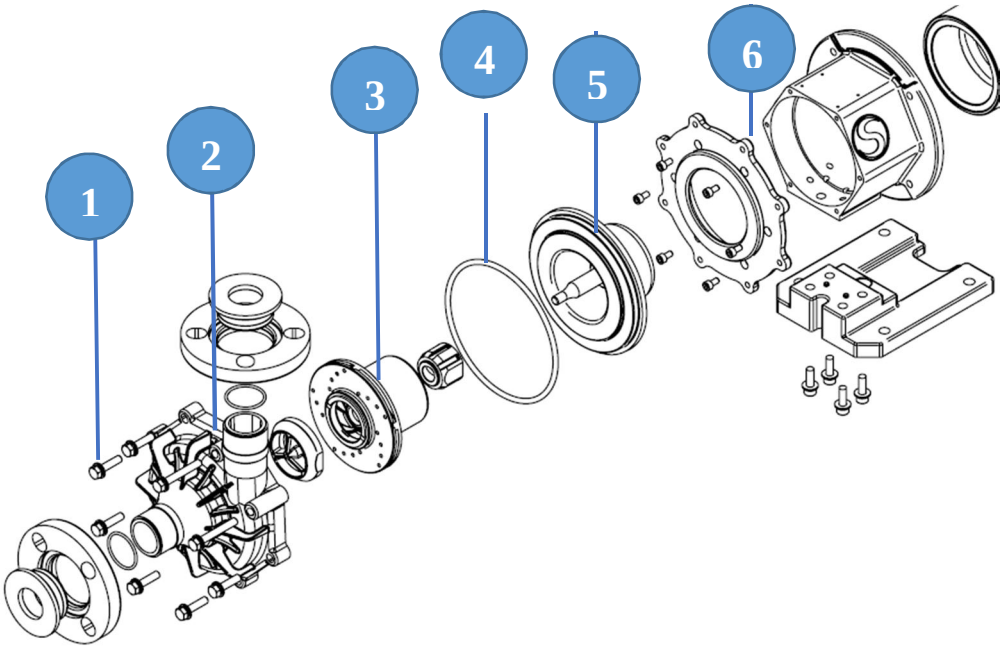

1. Loosen the 6 or 8 screws of the housing B.
2. Pull off the front housing C.
3. Pull off the impeller magnet D.
4. Remove the O-ring E of the housing.
5. Take the rear casing F off the lantern G.
   Caution: Strong magnetic forces and risk of bruises!

9.6 Disassembling the pump head

Press out the sleeve bearing B of the impeller magnet C and replace it.

Press out the shaft mounting D of the front housing E and replace it (Types 4-6).

Use appropriate tools to press out the components.
If in doubt, ask the manufacturer to replace them.

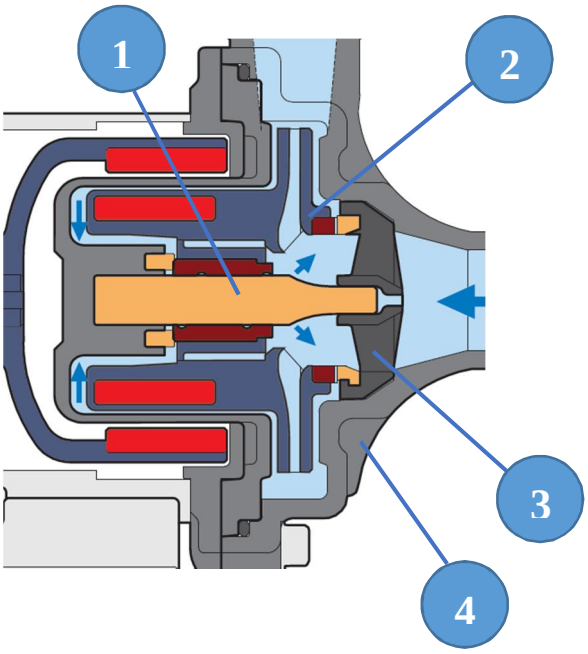

9.7 Assembling the pump

To reassemble the dismantled pump, proceed as follows:

Screw the adapter plate to the motor flange (MA types 4 only).

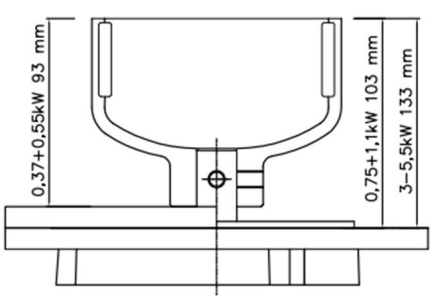

Valid for motor with following power:
0,37; 0,55; 0,75; 1,1; 3,0; 4,0; 5,5 kW

Place the driving magnet on the motor shaft and align it to below values.

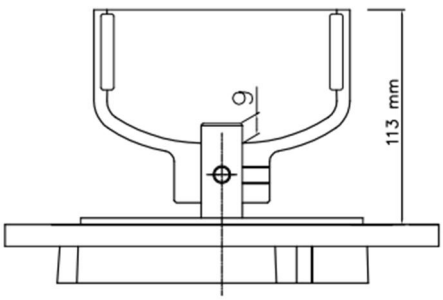

Valid for motor with following power:
1,5; 2,2 kW

Screw the lantern to the motor flange or adapter plate (using 3 screws for type 4, 4 screws for type 6).

Screw the mounting flange to the lantern making sure that the driving magnet is freely rotating.

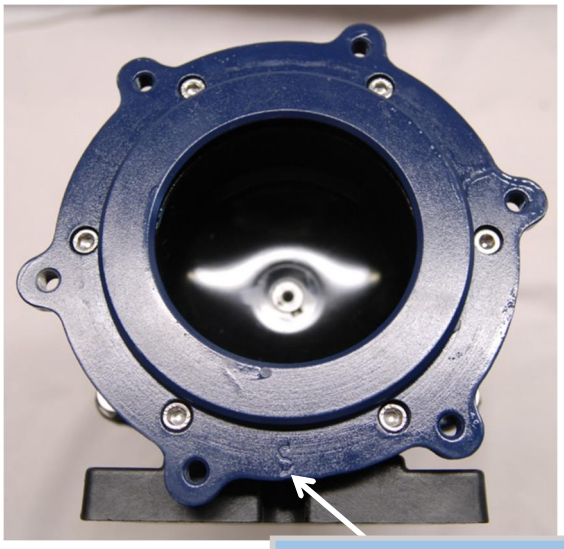

Put the rear casing with the impeller magnet inserted into the lantern.

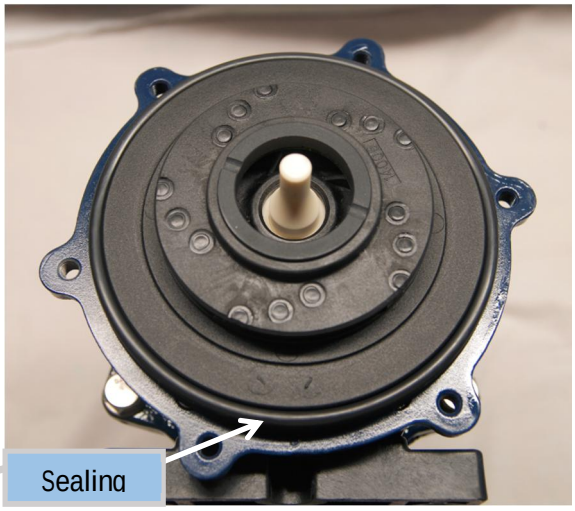

Caution:
Strong magnetic forces and risk of bruises!

Put the sealing ring on the rear casing.

Place the pump housing on the rear casing and screw the pump head to the mounting plate.

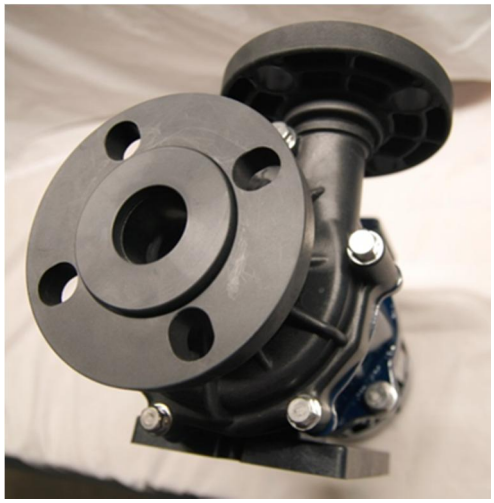

Torque of housing screws:

Type	Torque
MA types 4 and 5	7.5Nm
MA type 6, 7	10Nm

10. Troubleshooting

Malfunction	Cause	Elimination
The pump does not start when being switched on.	No voltage.	Check the voltage.
	The impeller jams.	Check both the impeller and the fan blade of the motor for easy movement.
The magnetic coupling disengages.	The relative density and/or viscosity of the fluid is too high.	Reduce the delivery rate; use a stronger magnetic coupling and a more powerful motor. Reduce the impeller diameter.
	The pump was switched off, then switched on again before the rotor stopped completely.	Make sure that the rotor has stopped completely before you switch on the pump again.
	The impeller jams.	Open the pump head to eliminate the obstruction.
There is a loud drumming flow noise.	Cavitation.	Reduce the delivery rate of the discharge line. Increase the suction line diameter. Cool down the fluid. Increase the NPSH of the system.
There is a loud flow noise. The starting delivery rate is insufficient.	Wrong direction of rotation.	Correct the motor's direction of rotation.
	There is air in the suction line or pump housing.	Deaerate the piping and the housing.
	Since the pump is non-self-priming, both the suction line and the pump housing must be filled with fluid.	Fill the suction line and housing with fluid
The delivery rate is too low.	Wrong direction of rotation.	Correct the direction of rotation.
	The suction and/or discharge line is clogged.	Clear the line, open the valves.
	Cavitation.	Increase the NPSH of the system, see Cavitation above.
	There is air in the pump.	Check the suction line and seal it.

Malfunction	Cause	Elimination
The delivery rate is too high.	Pump losses are less significant than presumed.	Reduce the flow rate of the discharge line. Reduce the impeller diameter. Use a frequency converter to adjust the motor speed.
Unusual mechanical running noise.	Damaged bearing of the motor.	Take the motor off the pump and check the motor bearings.
	Foreign particle in the pump head.	Open the pump head to check it.
	The pump head bearing overheats when running dry or hot.	Open the pump head to check it. Replace the sleeve bearing, if necessary.
Leakage between pump and motor.	The pump housing is damaged. The pump is damaged because of solids, dry-running or overheating*.	Make an expert dismantle the pump and eliminate the fault.

Table 4: Troubleshooting

*) Detailed information on overheating and dry-running

„Overheating“ means the excessive warming of the fluid resulting from a closed discharge and/or suction line. As the fluid cannot leave the pump, there is no exchange of fluid. The fluid remains in the pump where it permanently circulates and heats up. This excessive warming may cause considerable damage to the pump and its components.

To avoid an increase in temperature, the minimum flow rate must not fall below 5% of the maximum delivery rate!

If a pump is „running dry“, there is either air in the pump chamber or the pump is not filled up with fluid. Being neither cooled nor lubricated, the sleeve bearings will overheat.

As a consequence, the plastic material of the pump will also overheat resulting in a leaky rear casing out of which fluid will pass.

Do not hesitate to ask us for further information on dry running and overheating. We will be glad to help you.

Appendix

A) Technical data of MA pumps of type 4 / 4H

Technical data MA	Type 4								Type 4H
Size	8/160		10/180		12/190		14/220		16/160
Material*	PP (glass-fibre reinforced) / ETFE (carbon-fibre reinforced)								
Max. delivery head in [m.WC] at 50 Hz	8		10		12		14		16
Max. volume flow in [l/min] at 50 Hz	160		180		190		220		160
Max. density in [g/cm³] at 50 Hz**	1.7	2.6	1.3	2.0	1.15	1.7	0.9	1.4	1.15
Motor capacity in [kW]	0.37	0.55	0.37	0.55	0.37	0.55	0.37	0.55	0.55
Current rating (400 V, 50 Hz) in [A]	0.96	1.41	0.96	1.41	0.96	1.41	0.96	1.41	1.41
Rated speed in [rpm] at 50 Hz / 60 Hz	3000/3600								
Suction port	DN 40 (alternative G 2 1/4")								DN 25***
Discharge port	DN 40 (alternative G 2 1/4")								DN 25***
Voltage in [V]	230 V AC or 230/400 V three-phase AC								
Protection class	IP 55								
Max. flow velocity in [m/s]	suction side = 1 / discharge side = 3								
Max. temperature for PP/ETFE in [°C]	70/80								
Max. system pressure for PP/ETFE at 20 °C in [bar]	2.2								

* Material used for housing, impeller unit and rear casing: (sheath of inner magnet made of PP without fibre reinforcement)

** approx. value at max. volume flow (higher density possible when flow rate is reduced) *** alternative G 1 1/2"

Table 5: Technical data of MA pumps of type 4 / 4H

Dimensions	Type 4				Type 4H
Size	8/160	10/180	12/190	14/220	16/160
Dimension a in [mm]	110				130
Dimension b in [mm]	51				65
Dimension c in [mm]	98				130
Dimension d in [mm]	95				115
Dimension e in [mm]	121				145
Dimension f in [mm]	87				90
Dimension g in [mm]	150				173
Dimension H in [mm]	216				260
Dimension i in [mm]	12–18				Ø12
Dimension L in [mm]	421				424
Dimension W in [mm]	140				160

Motor dimensions may differ according to manufacture.

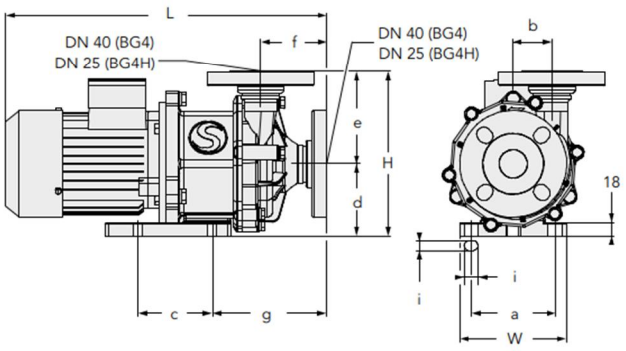

Fig.. 2: Technical drawing of an MA pump of type 4 / 4H

Characteristic curves

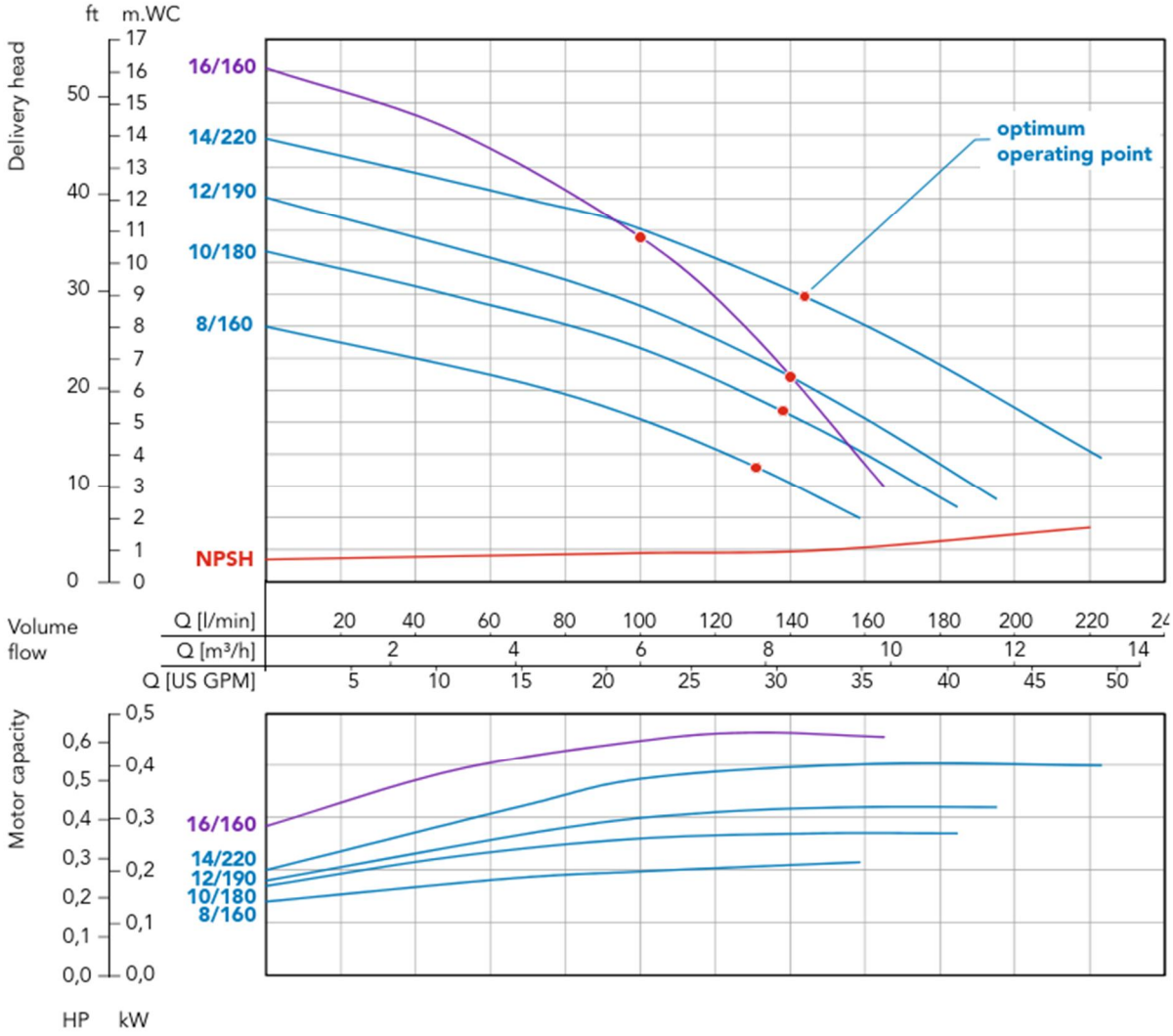

Fig. 3: Characteristic curves of MA pumps of type 4 / 4H, measured with water of 20°C

B) Technical data of MA pumps of type 5 / 5H

Technical data MA	Type 5							Type 5H
Size	10/240	13/260		15/280		18/320		24/200
Material*	PP (glass-fibre reinforced) / ETFE (carbon-fibre reinforced)							
Max. delivery head in [m.WC] at 50 Hz	10	13		15		18		24
Max. volume flow in [l/min] at 50 Hz	240	260		280		320		200
Max. density in [g/cm³] at 50 Hz**	1.8	1.3	2.0	1.2	1.7	1.0	1.5	1.25
Motor capacity in [kW]	0.75	0.75	1.1	0.75	1.1	0.75	1.1	1.1
Current rating (400 V, 50 Hz) in [A]	1.56	1.56	2.25	1.56	2.25	1.56	2.25	2.25
Rated speed in [rpm] at 50 Hz / 60 Hz	3000/3600							
Suction port	DN 40 (alternative G 2 1/4")							DN 25***
Discharge port	DN 40 (alternative G 2 1/4")							DN 25***
Voltage in [V]	230/400 V three-phase AC							
Protection class	IP 55							
Max. flow velocity in [m/s]	suction side = 1 / discharge side = 3							
Max. temperature for PP/ETFE in [°C]	70/80							
Max. system pressure for PP/ETFE at 20 °C in [bar]	3.2							

* Material used for housing, impeller unit and rear casing: (sheath of inner magnet made of PP without fibre reinforcement)

** approx. value at max. volume flow (higher density possible when flow rate is reduced) *** alternative G 1 1/2"

Table 6: Technical data of MA pumps of type 5 / 5H

Dimensions	Type 5							Type 5H
Size	10/240	13/260		15/280		18/320		24/200
Dimension b in [mm]	57,5							65
Dimension e in [mm]	139							145
Dimension f in [mm]	103							90
Dimension g in [mm]	184							173
Dimension H in [mm]	254							260
Dimension L in [mm]	491	491	526	491	526	491	526	516

Motor dimensions may differ according to manufacture.

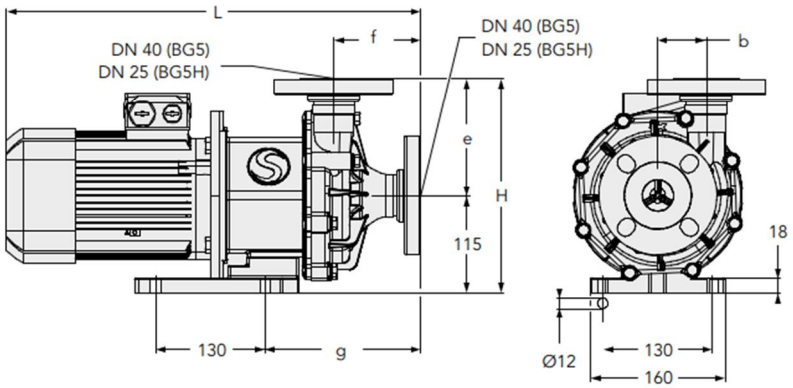

Fig. 4: Technical drawing of an MA pump of type 5 / 5H

Characteristic curves

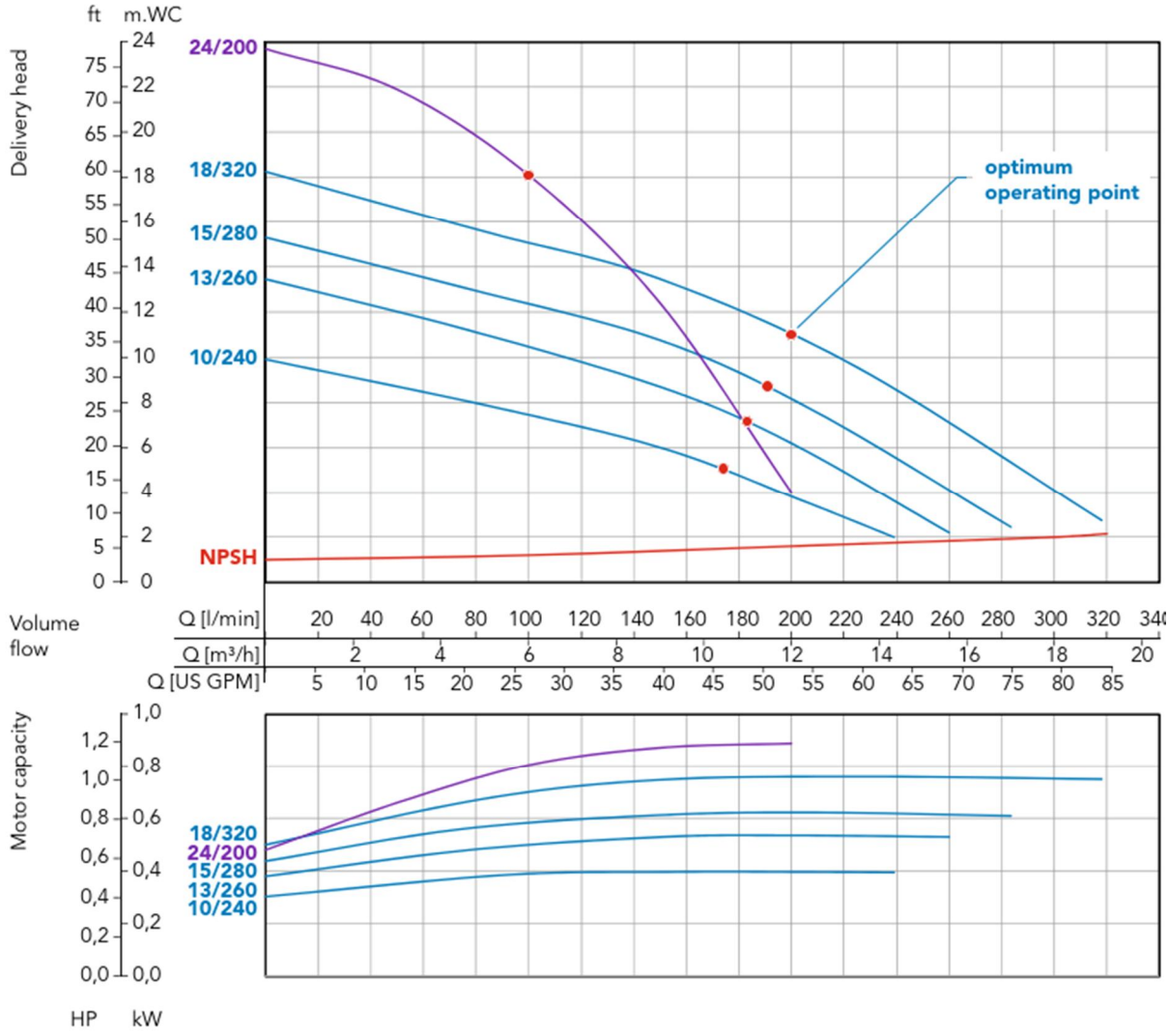

Fig. 5: Characteristic curves of MA pumps of type 5, measured with water of 20°C

C) Technical data of MA pumps of type 6 / 6H

Technical data MA	Type 6						Type 6H		
Size	22/400		26/450	29/470	30/510		21/190	26/220	29/230
Material*	PP (glass-fibre reinforced) / ETFE (carbon-fibre reinforced)								
Max. delivery head in [m.WC] at 50 Hz	22		26	29	30		21	26	29
Max. volume flow in [l/min] at 50 Hz	400		450	470	510		190	220	230
Max. density in [g/cm³] at 50 Hz**	1.2	1.8	1.2	1.0	1.15	1.5	1.8	1.8	1.6
Motor capacity in [kW]	1.5	2.2	2.2	2.2	3	4	1.5	2.2	2.2
Current rating (400 V, 50 Hz) in [A]	3	4.2	4.2	4.2	5.6	7.3	3	4.2	4.2
Rated speed in [rpm] at 50 Hz / 60 Hz	3000 / 3600								
Suction port	DN 50 (alternative G 2 3/4")						DN 25 (alternative G 1 1/2")		
Discharge port	DN 40 (alternative G 2 1/4")						DN 25 (alternative G 1 1/2")		
Voltage in [V]	230 / 400 V three-phase AC								
Protection class	IP 55								
Max. flow velocity in [m/s]	suction side = 1 / discharge side = 3								
Max. temperature for PP / ETFE in [°C]	70 / 80								
Max. system pressure for PP / ETFE at 20 °C in [bar]	5				6		6		

* Material used for housing, impeller unit and rear casing: (sheath of inner magnet made of PP without fibre reinforcement)

** approx. value at max. volume flow (higher density possible when flow rate is reduced)

Table 7: Technical data of MA pumps of type 6 / 6H

Dimensions	Type 6						Type 6H		
Size	22/400		26/450	29/470	30/510		21/190	26/220	29/230
Dimension a in [mm]	208				230		208		
Dimension c in [mm]	200				261		200		
Dimension d in [mm]	116				135		116		
Dimension H in [mm]	261				280		261		
Dimension L in [mm]	525	565	565	565	619	602	525	565	565

Motor dimensions may differ according to manufacture.

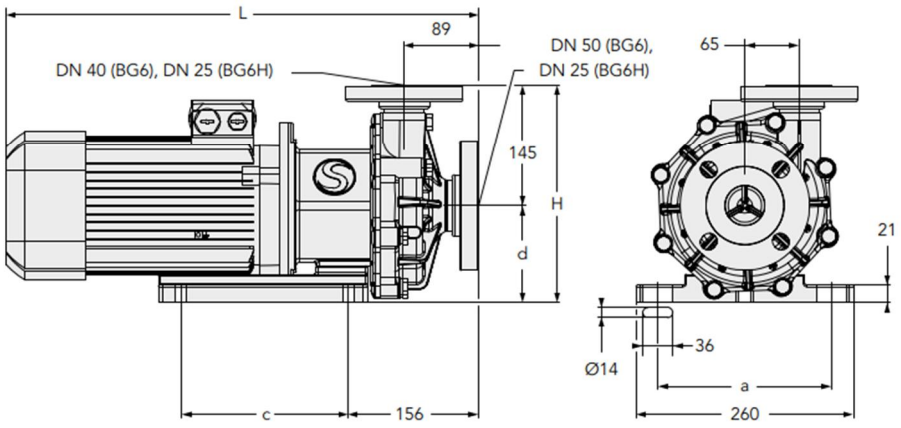

Fig.. 6: Technical drawing of an MA pump of type 6 / 6H

Characteristic curves

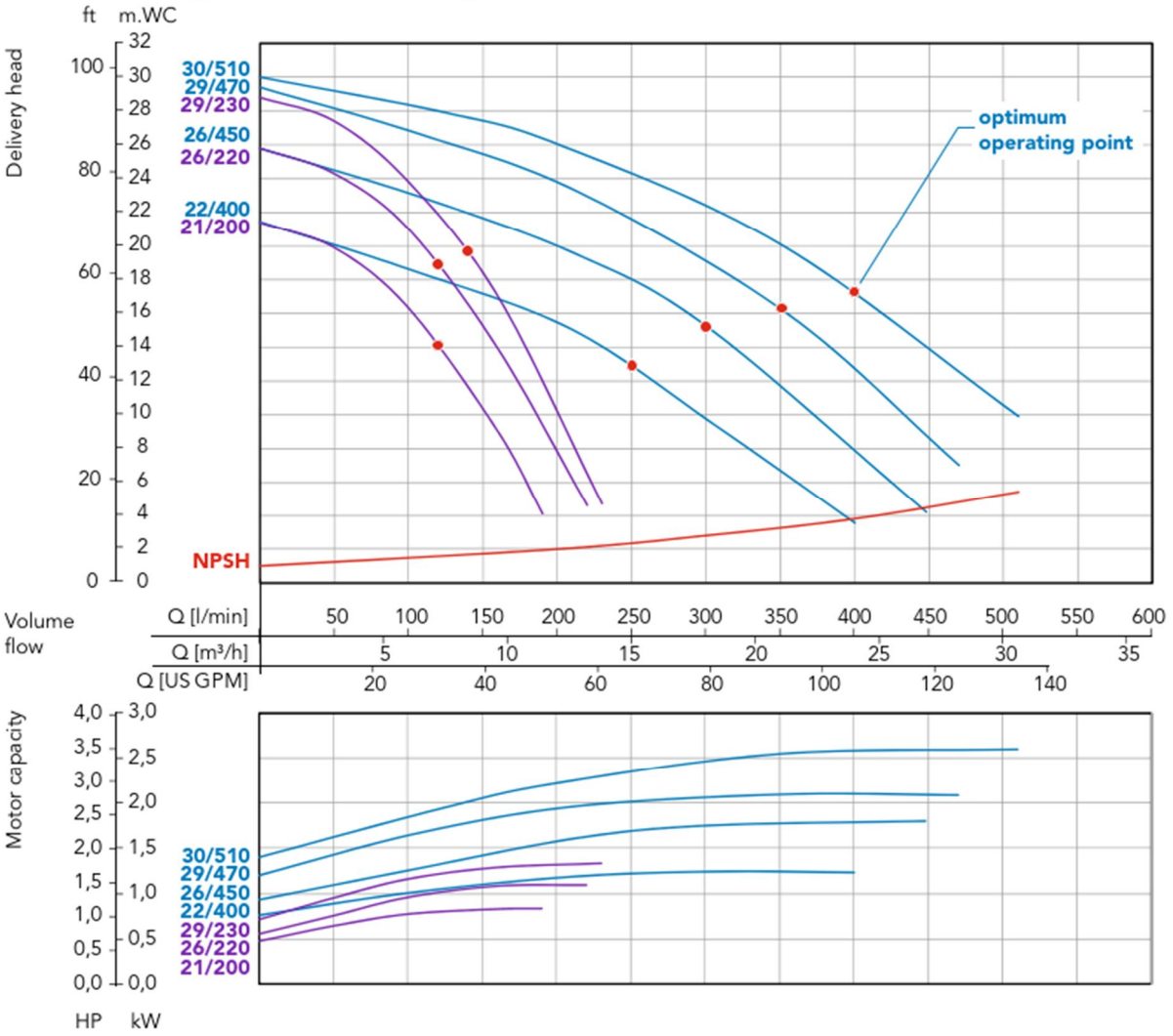

Fig. 7: Characteristic curves of MA pumps of type 6 / 6H, measured with water of 20°C

D) Technical data of MA pumps of type 7

Technical data MA	Type 7			
Size	**29/950**		**36/750**	**42/500**
Material*	PP (glass-fibre reinforced)			
Max. delivery head in [m.WC] at 50 Hz	29		36	42
Max. volume flow in [l/min] at 50 Hz	950		750	500
Max. density in [g/cm³] at 50 Hz**	1.0	1.2	1	
Motor capacity in [kW]	4	5.5	5.5	
Current rating (400 V, 50 Hz) in [A]	7.3	9.9	9.9	
Rated speed in [rpm] at 50 Hz / 60 Hz	3000			
Suction port	DN 65			
Discharge port	DN 50			
Voltage in [V]	400 / 690 V three-phase AC			
Protection class	IP 55			
Max. flow velocity in [m/s]	suction side = 1 / discharge side = 3			
Max. temperature for PP / ETFE in [°C]	70			
Max. system pressure for PP at 20 °C in [bar]	6			

* Material used for housing, impeller unit and rear casing: (sheath of inner magnet made of PP without fibre reinforcement)

** approx. value at max. volume flow (higher density possible when flow rate is reduced)

Table 8: Technical data of MA pumps of type 7

Dimensions	Type 7			
Size	**29/950**		**26/750**	**42/500**
Dimension L in [mm]	608	612	612	

Motor dimensions may differ according to manufacture.

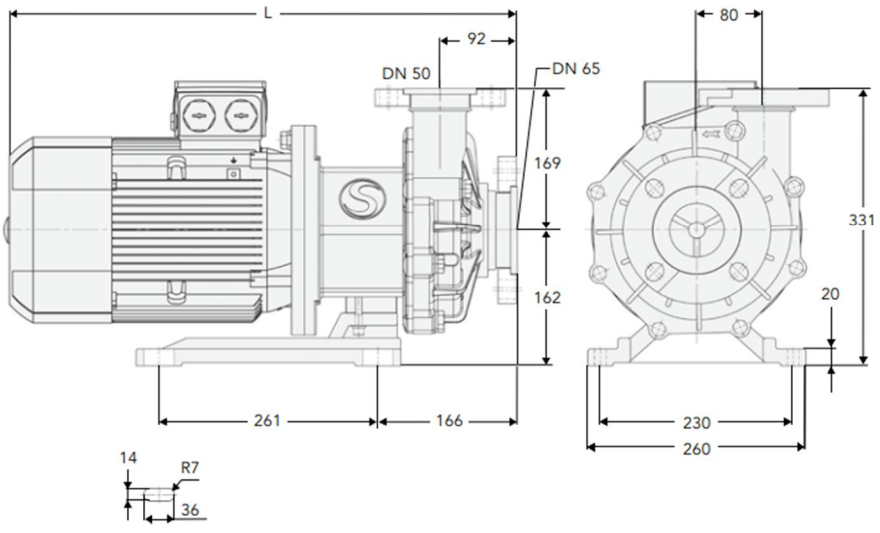

Fig.. 8: Technical drawing of an MA pump of type 7

Characteristic curves

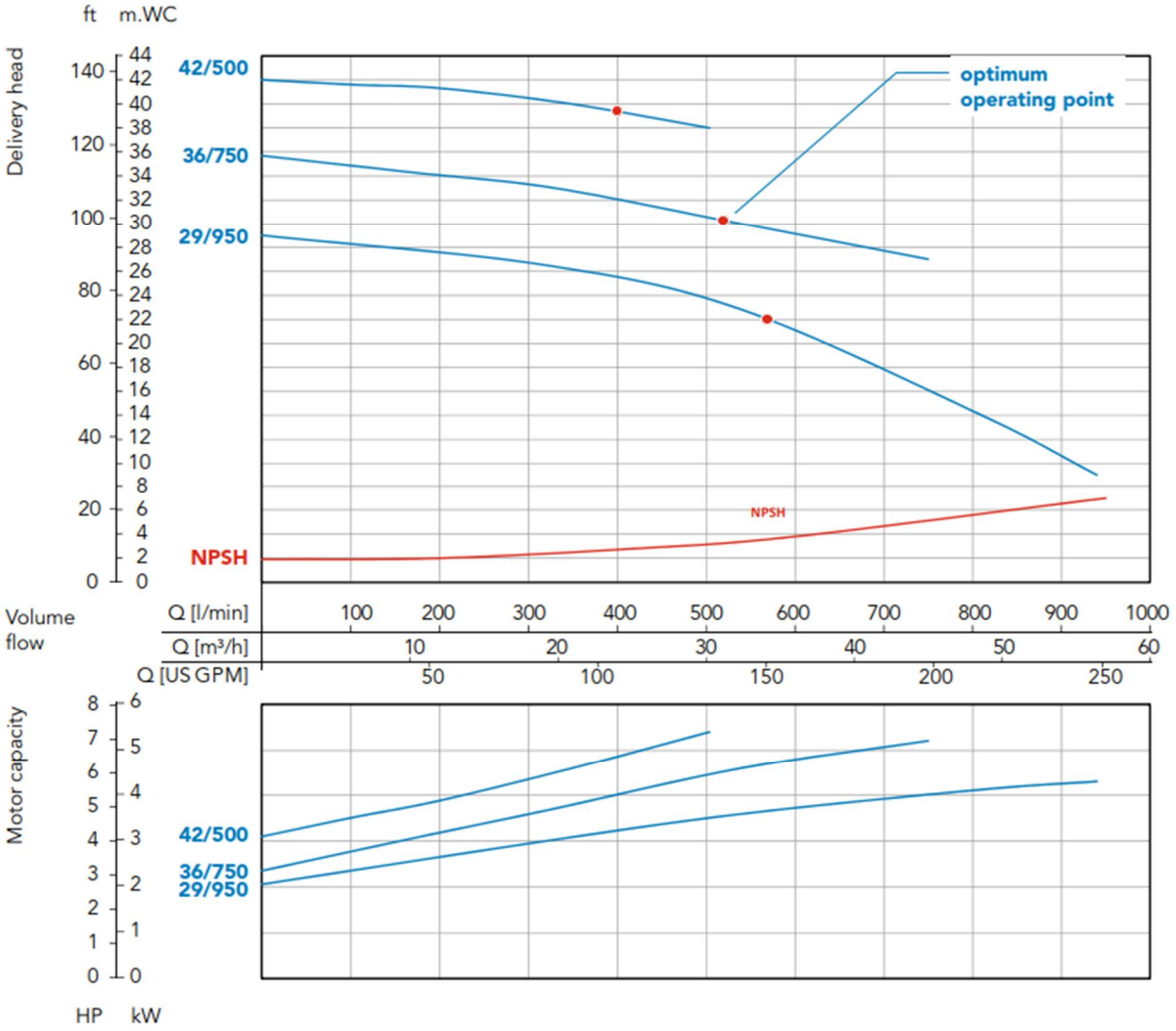

Fig. 9: Characteristic curves of MA pumps of type 6 / 6H, measured with water of 20°C

E) Exploded view of an MA pump of type 4 / 4H

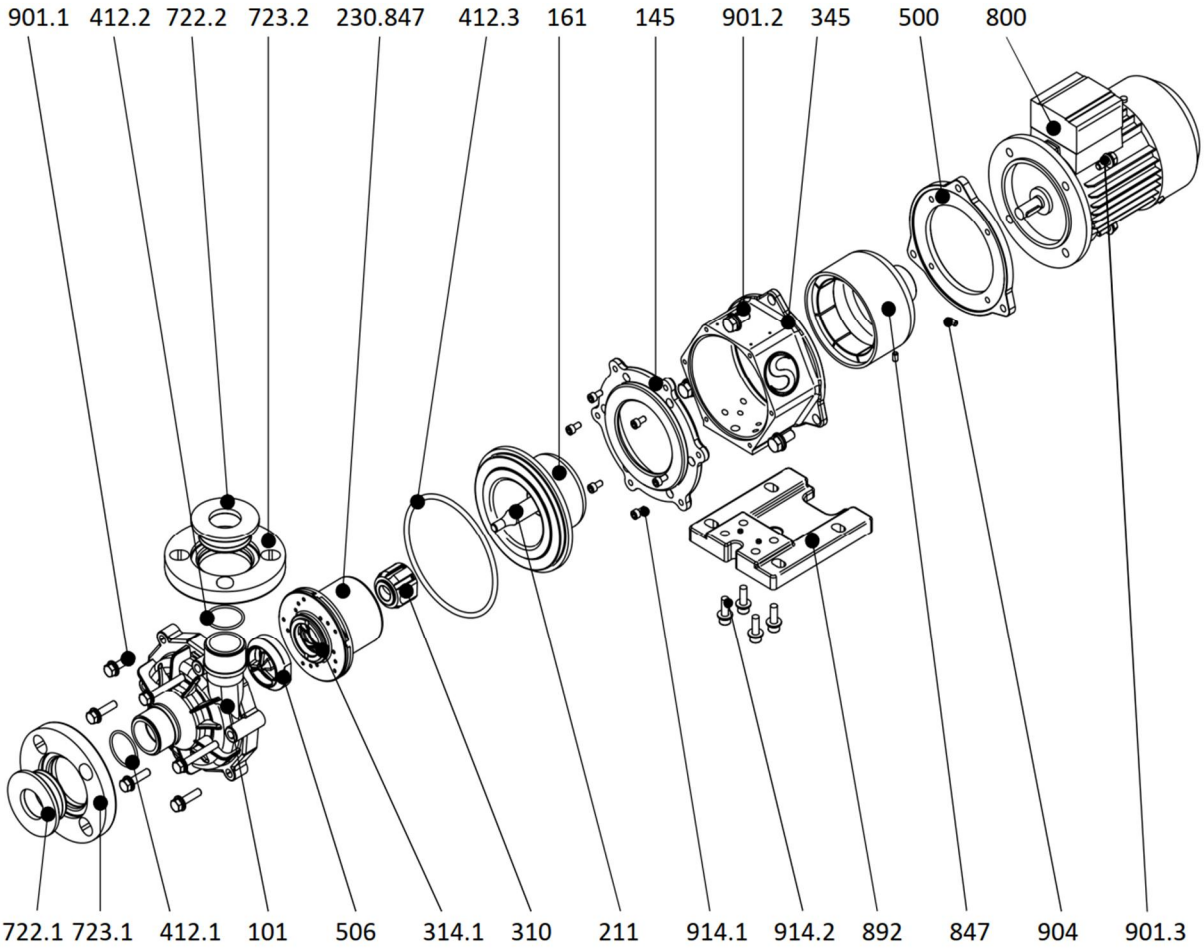

Spare parts list for MA pumps of type 4 / 4H

Part no.	Quantity	Article no.	Name	Material
101	1		Pump housing	see technical data sheet
145	1		Mounting flange	grey cast iron
161	1		Rear casing	see technical data sheet
211	1		Centering axis	aluminium oxide ceramic 99.7%
230.847	1		Impeller magnet	see technical data sheet
310	1		Sleeve bearing	SiC / ETFE
314.1	1		Impeller starting ring	graphite
314.2	1		Starting ring of rear casing	aluminium oxide ceramic 99.7%
345	1		Lantern	grey cast iron
412.1	1		O-ring of flange	see technical data sheet
412.2	1		O-ring of flange	see technical data sheet
412.3	1		O-ring of housing	see technical data sheet
500	1		Adapter plate	grey cast iron
506	1		Shaft mounting	see technical data sheet
722.1	1		Flange insert of suction port	see technical data sheet
722.2	1		Flange insert of discharge port	see technical data sheet
723.1	1		Slip-on flange to suction port	see technical data sheet
723.2	1		Slip-on flange to discharge port	see technical data sheet
800	1		Electric motor	aluminium
847	1		Driving magnet	grey cast iron / ferrite
892	1		Base plate	PP (glass-fibre reinforced)
901.1	4 2		M6 x 35 hexagon screw M8 x 60 hexagon screw	A2 A2
901.2	3		M10 x 25 hexagon screw	A2
901.3	4		M8 x 20 hexagon screw	A2
904	2		M8 x 10 setscrew	A2
914.1	6		M6 x 12 Allen screw	A2
914.2	4		M8 x 25 Allen screw	A2

F) Exploded view of an MA pump of type 5 / 5H

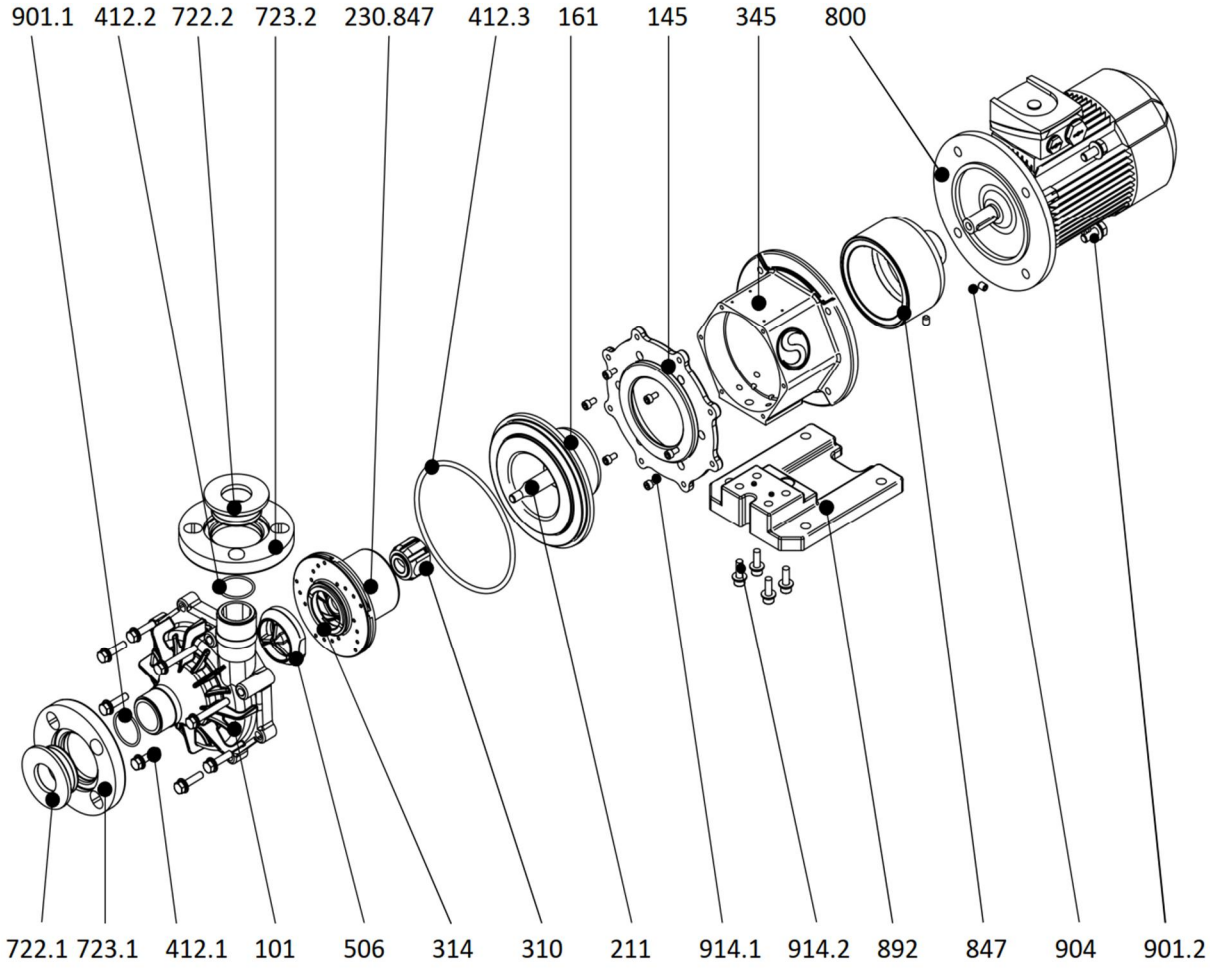

Spare parts list for MA pumps of type 5 / 5H

Part no.	Quantity	Article no.	Name	Material
101	1		Pump housing	see technical data sheet
145	1		Mounting flange	grey cast iron
161	1		Rear casing	see technical data sheet
211	1		Centering axis	aluminium oxide ceramic 99.7%
230.847	1		Impeller magnet	see technical data sheet
310	1		Sleeve bearing	SiC / PTFE
314.1	1		Impeller starting ring	graphite
314.2	1		Starting ring of rear casing	aluminium oxide ceramic 99.7%
345	1		Lantern	grey cast iron
412.1	1		O-ring of flange	see technical data sheet
412.2	1		O-ring of flange	see technical data sheet
412.3	1		O-ring of housing	see technical data sheet
506	1		Shaft mounting	see technical data sheet
722.1	1		Flange insert of suction port	see technical data sheet
722.2	1		Flange insert of discharge port	see technical data sheet
723.1	1		Slip-on flange to suction port	see technical data sheet
723.2	1		Slip-on flange to discharge port	see technical data sheet
800	1		Electric motor	aluminium
847	1		Driving magnet	grey cast iron / ferrite
892	1		Base plate	PP (glass-fibre reinforced)
901.1	6 2		M6 x 35 hexagon screw M8 x 60 hexagon screw	A2 A2
901.2	4		M10 x 25 hexagon screw	A2
904	2		M8 x 10 setscrew	A2
914.1	6		M6 x 12 Allen screw	A2
914.2	4		M10 x 25 Allen screw	A2

G) Exploded view of an MA pump of type 6 / 6H (1.5-2.2kW motor)

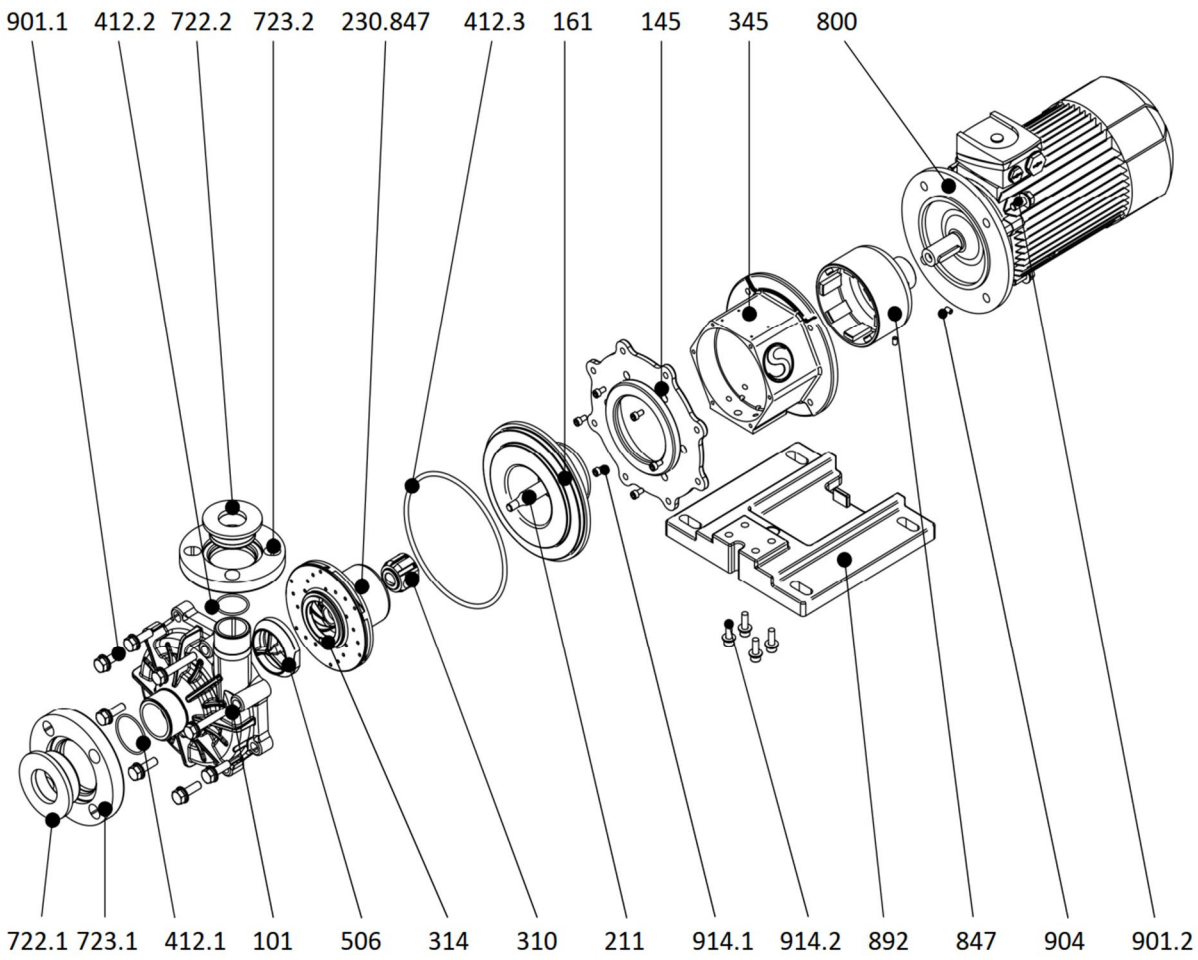

Spare parts list for MA pumps of type 6 with 1.5 to 2.2kW motor

Part no.	Quantity	Article no.	Name	Material
101	1		Pump housing	see technical data sheet
145	1		Mounting flange	grey cast iron
161	1		Rear casing	see technical data sheet
211	1		Centering axis	aluminium oxide ceramic 99.7%
230.847	1		Impeller magnet	see technical data sheet
310	1		Sleeve bearing	SiC / PTFE
314.1	1		Impeller starting ring	graphite
314.2	1		Starting ring of rear casing	aluminium oxide ceramic 99.7%
345	1		Lantern	grey cast iron
412.1	1		O-ring of flange	see technical data sheet
412.2	1		O-ring of flange	see technical data sheet
412.3	1		O-ring of housing	see technical data sheet
506	1		Shaft mounting	see technical data sheet
722.1	1		Flange insert of suction port	see technical data sheet
722.2	1		Flange insert of discharge port	see technical data sheet
723.1	1		Slip-on flange to suction port	see technical data sheet
723.2	1		Slip-on flange to discharge port	see technical data sheet
800	1		Electric motor	aluminium
847	1		Driving magnet	grey cast iron / ferrite
892	1		Base plate	PP (glass-fibre reinforced)
901.1	6 2		M10 x 35 hexagon screw M10 x 65 hexagon screw	A2 A2
901.2	4		M10 x 25 hexagon screw	A2
904	2		M8 x 8 setscrew	A2
914.1	6		M6 x 12 Allen screw	A2
914.2	4		M8 x 25 Allen screw	A2

H) Exploded view of an MA pump of type 6 with 3 to 4kW motor

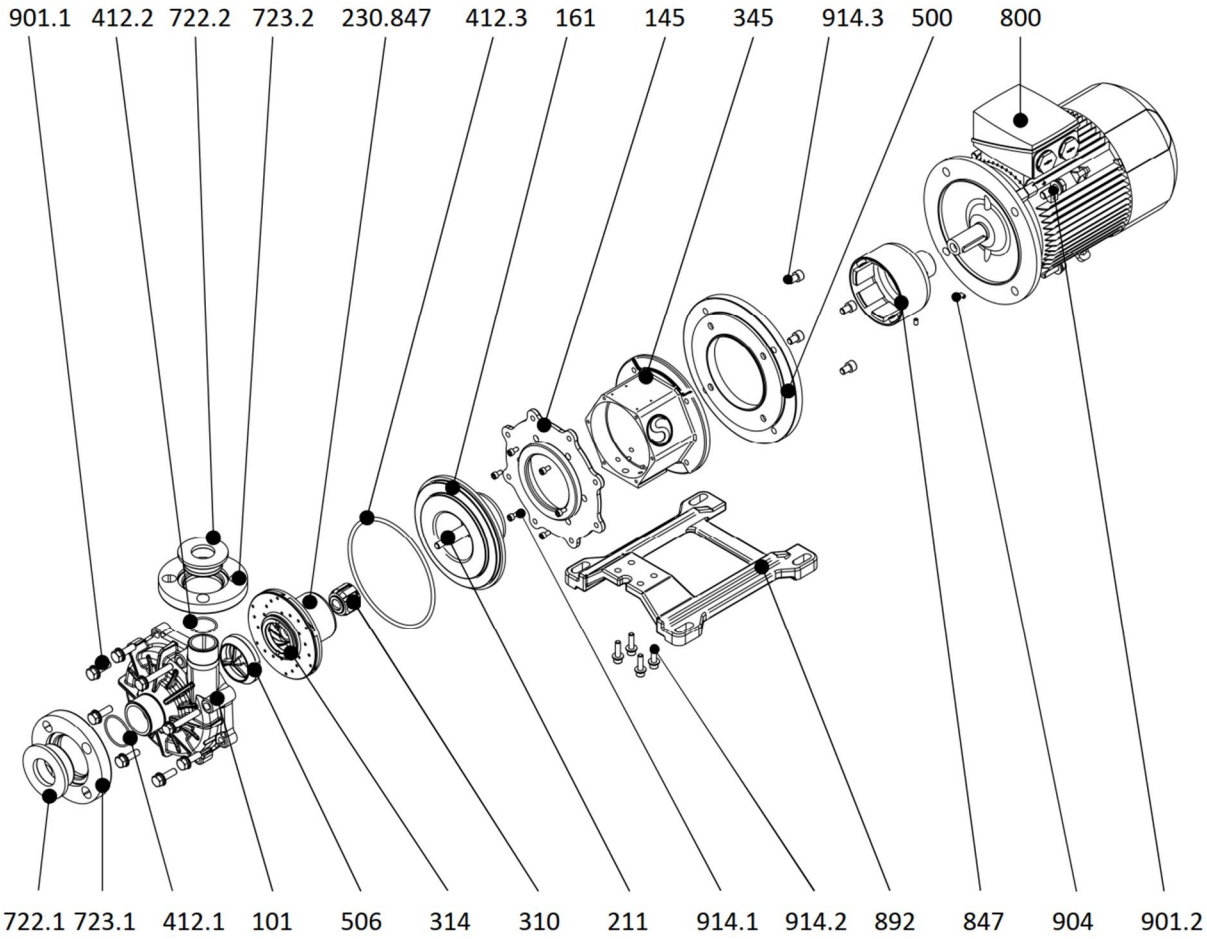

Spare parts list for MA pumps of type 6 with 3 to 4kW motor

Part no.	Quantity	Article no.	Name	Material
101	1		Pump housing	see technical data sheet
145	1		Mounting flange	grey cast iron
161	1		Rear casing	see technical data sheet
211	1		Centering axis	aluminium oxide ceramic 99.7%
230.847	1		Impeller magnet	see technical data sheet
310	1		Sleeve bearing	SiC / PTFE
314.1	1		Impeller starting ring	graphite
314.2	1		Starting ring of rear casing	aluminium oxide ceramic 99.7%
345	1		Lantern	grey cast iron
412.1	1		O-ring of flange	see technical data sheet
412.2	1		O-ring of flange	see technical data sheet
412.3	1		O-ring of housing	see technical data sheet
500	1		Adapter plate	grey cast iron
506	1		Shaft mounting	see technical data sheet
722.1	1		Flange insert of suction port	see technical data sheet
722.2	1		Flange insert of discharge port	see technical data sheet
723.1	1		Slip-on flange to suction port	see technical data sheet
723.2	1		Slip-on flange to discharge port	see technical data sheet
800	1		Electric motor	aluminium
847	1		Driving magnet	grey cast iron / ferrite
892	1		Base plate	PP (glass-fibre reinforced)
901.1	6 2		M10 x 35 hexagon screw M10 x 65 hexagon screw	A2 A2
901.2	4		M12 x 35 hexagon screw	A2
904	2		M8 x 10 setscrew	A2
914.1	6		M6 x 12 Allen screw	A2
914.2	4		M8 x 30 Allen screw	A2
914.3	4		M10 x 20 Allen screw	A2

I) Exploded view of an MA pump of type 7

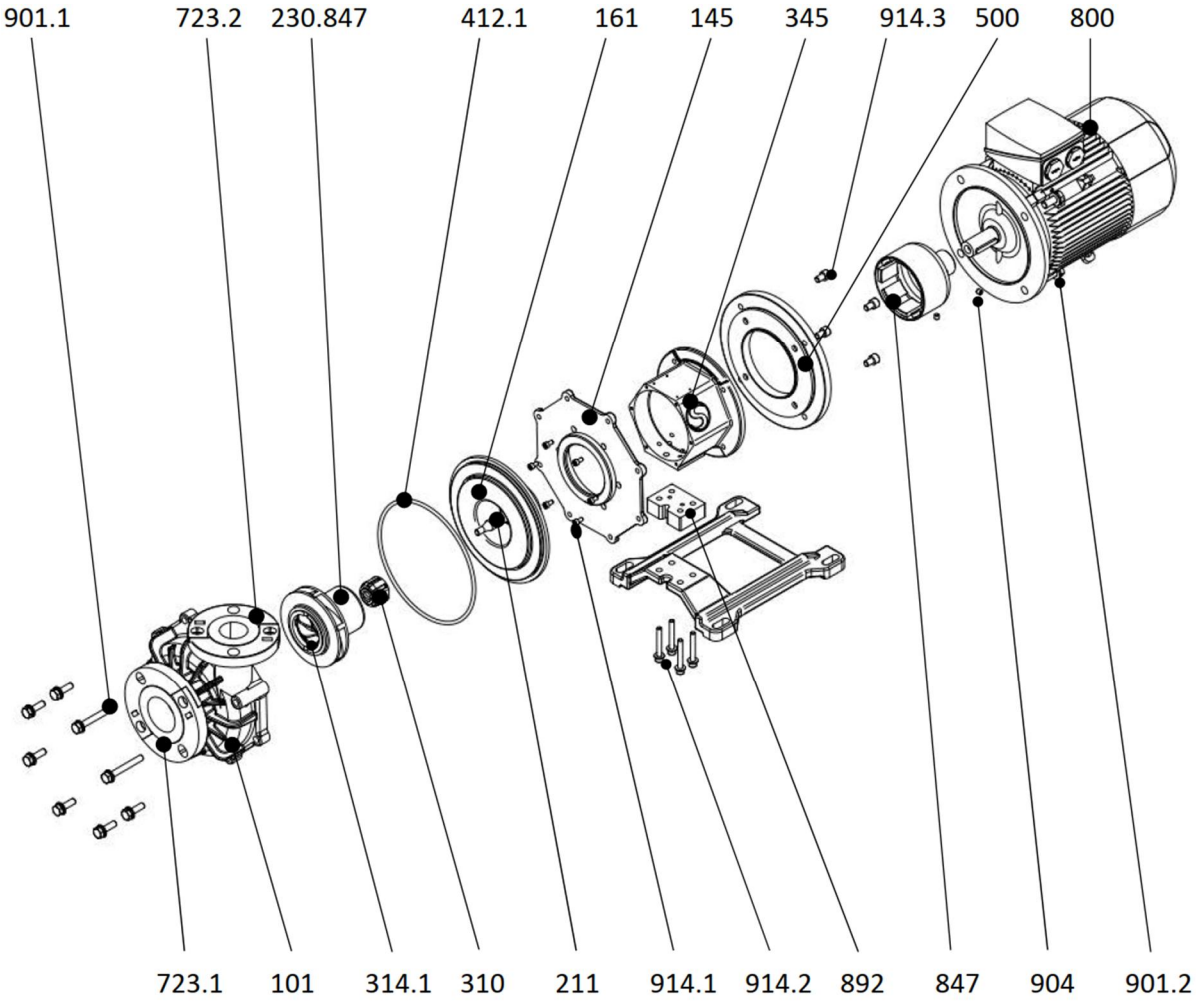

Spare parts list for MA pumps of type 7

Part no.	Quantity	Article no.	Name	Material
101	1		Pump housing	see technical data sheet
145	1		Mounting flange	grey cast iron
161	1		Rear casing	see technical data sheet
211	1		Centering axis	aluminium oxide ceramic 99.7%
230.847	1		Impeller magnet	see technical data sheet
310	1		Sleeve bearing	SiC / PTFE
314.1	1		Impeller starting ring	graphite
345	1		Lantern	grey cast iron
412.1	1		O-ring of flange	see technical data sheet
500	1		Adapter plate	grey cast iron
723.1	1		Slip-on flange to suction port	see technical data sheet
723.2	1		Slip-on flange to discharge port	see technical data sheet
800	1		Electric motor	aluminium
847	1		Driving magnet	grey cast iron / ferrite
892	1		Base plate	PP (glass-fibre reinforced)
901.1	6 2		M10 x 35 hexagon screw M10 x 65 hexagon screw	A2 A2
901.2	4		M12 x 35 hexagon screw	A2
904	2		M8 x 10 setscrew	A2
914.1	6		M6 x 12 Allen screw	A2
914.2	4		M8 x 30 Allen screw	A2
914.3	4		M10 x 20 Allen screw	A2

J) Safety instructions for electric motors

Information on safety and commissioning for low voltage asynchronous motors
(in accordance with L. V. directive 2006/95/EC)

Types: 1TZ9,5AP..,6AP..,7AA,7AP..,7JB,7JE, 8AP..,9AP..

Shaft height: 56 to 315 mm

1 General information

Electric motors have dangerous voltage-carrying and rotating components as well as surfaces that may become hot. All work involved in the transport, connection, commissioning and regular maintenance must be carried out by **qualified, responsible specialists** (note VDE 0105; IEC 364). Improper behaviour may result in serious **injury** and **damage to property**. The applicable **national, local** and **works regulations** and **requirements** must be complied with.

2 Intended use

These motors are intended for commercial installations. They comply with the harmonized standards of the **EN60034 (VDE 0530)** series. Utilization in areas subject to **explosion hazard is not permitted**, unless **expressly intended** for this purpose (see additional notes). In certain special cases, for example, on use in non-commercial installations, if requirements are more strict (e.g. protection against contact with children's fingers), it is the responsibility of the customer to ensure compliance on installing the equipment.
The motors are rated for ambient temperatures of **-20°C to +40°C** and site altitudes **≤ 1000 m** above sea level. Any contradictory information on the rating plate **must** be observed. The conditions on site **must** correspond to all rating plate specifications.

Low voltage motors are **components** for installation in machinery in terms of the Machine directive 2006/42/EC. **Commissioning** must not take place until it has been proved that the end product conforms with this guideline (please note EN 60204-1).

3 Transport and storage

Any **damage** detected after dispatch should be reported immediately to the transport company and **commissioning** must be postponed. Tighten the eyebolts. They are designed for the weight of the motor only therefore do not attach any additional loads. If necessary, use suitable, adequately dimensioned transporting equipment (e.g. rope guides).
Remove existing **shipping braces** before commissioning; and reuse for subsequent transport. If motors are stored, a **dry**, **dust-free** and **low vibration** (v_{rms} **≤** 0.2 mm/s) environment is important (to avoid bearing standstill damage). On long-term storage, the regrease interval of the bearings is reduced.
Before commissioning, measure the impedance of the insulation. If values ≤1kΩ per volt of rated voltage are measured, the windings must be dried out.
When motors with roller bearings for increased cantilever force are operated the value of cantilever force must be minimal 30% of permissible cantilever force.. Operating with smaller cantilever force is the cause of bearing faults.

4 Installation

Ensure an even underlying surface, good foot or flange fixing and precise alignment for direct coupling. It is important to ensure that the mounting conditions do not cause resonance with the rotational frequency and the doubled supply frequency. Turn the rotor **by hand** and listen for any unusual grinding noises. **Check** the **direction of rotation** in the decoupled state (note section 5).
Only mount or remove drive components (belt pulley, coupling, etc.) using suitable tools (heat up), and cover to shield against contact. Avoid unpermissible belt tensions (see catalogue and technical data).
The **balancing type** is specified on the shaft end face or rating plate (**H** = half- and **F** = full-key balancing). On mounting the drive, note the balancing type! In the case of half key balancing, the **protruding, visible part** of the half-featherkey must be removed.
A canopy is recommended for designs with the shaft end pointing downwards, and with the shaft end pointing upwards a cover must be **provided by the customer** to prevent foreign bodies from falling into the fan.

Do not obstruct ventilation! Discharged air, also from neighbouring equipment, must not be sucked in again immediately.
Checking of bearing grease must be carry out when motors are longer than 12 months storaged. When storage conditions are the cause of grease depreciation (presence of condensate, consistency change) the grease must be exchanged. Grease exchangr must be carry out no later than in three year interval.

5 Electrical connection

Work is only permitted to be carried out by **qualified specialists** on the **stationary motor**, while **disconnected** and **prevented from being switched on again**. This also applies for the auxiliary power circuits (e.g. Anti-condensation heaters).

Check that the equipment is potential-free!

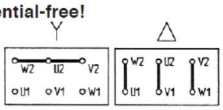

If the **tolerance limits** are exceeded that are specified in **EN 60034, part 1 / IEC 34-1** (voltage ± 5%, frequency ± 2%, shape of curve, symmetry) the heating effect is increased and the electromagnetic compatibility is affected. Please note the specifications on the rating plate and the connection diagram in the terminal box.
Connections must be made in such a way as to ensure that a **permanently** safe electrical connection is maintained (no protruding wire ends); use the corresponding cable end pieces. Create a **safe earth continuity connection**.

Tightening torques for terminal board connections

	Thread Ø	M4	M5	M6	M8	M10	M12	M16
	Tightening torque [Nm]	0,8.. ..1,2	1,8.. ..2,5	2,7.. ..4	5,5.. ..8	9.. ..13	16.. ..20	36.. ..40

Clearences in air between bare live parts themselves and between bare live parts and earth must be ≥ 5,5 mm ($U_{rated} \leq$ 690 V) .

It must be ensured that the terminal box does not contain **foreign** bodies, dirt or humidity. Seal any unused cable entry openings against **dust** and **water**.
Secure the **featherkey** on test operation without drive components. For motors with brakes, check that the brakes are operating perfectly before commissioning.

6 Operation

Vibration levels of $v_{rms} \leq$ 3.5 mm/s ($P_N \leq$ 15 kW) or $v_{rms} \leq$ 4.5 mm/s ($P_N >$ 15 kW) are quite acceptable in the coupled state.
If deviations from normal operation occur - e.g. **increased temperatures, noises, vibration** - the motor should be **switched off** in the event of doubt. Determine the causes and contact the manufacturer if necessary. Do not disconnect protective equipment, even under test operation.
Under dirty operating conditions, clean the air channels regularly. Open any closed **condensate water** holes from time to time!

For motors **without regreasing facilities**, bearing or grease replacement must be carried out in accordance with the manufacturer's instructions, or after 3 years, whichever is sooner.
Bearings **with regreasing facilities** must be regreased when the motor is running.
In the case of **motors with separate ventilation**, the separately-driven fan must be switched on throughout motor operation.

7 Further information

Information provided about any additional equipment must be noted!

These notes on safety and commissioning must be retained for future reference!

K) Declaration of decontamination

According to various legal regulations on labour protection, including the German Workplace Regulations (ArbStättV), Hazardous Substances Regulations (GefStoffV) and regulations for the prevention of accidents, as well as environmental regulations such as the German Waste Act (AbfG) and the Water Resources Law (WHG), all industrial and commercial enterprises are obliged to protect their employees and other persons as well as the environment from harmful influences and effects when handling hazardous substances.

We therefore ask you to attach a declaration of decontamination to any pump or component you send us for repair, stating that you carefully cleaned and, if necessary, thoroughly rinsed with neutral fluid the pump or component before you shipped it to us. Notwithstanding the receipt of this declaration, we reserve the right to reject its repair for other reasons.

No SONDERMANN product or component of them will be accepted for service or repair unless the declaration of decontamination is enclosed!

Apart from that, we do NOT accept any pump that has been operated with radioactive substances.

When sending in the pump or a component, please inform us if, despite carefully emptying and cleaning the pump, there are still some safety precautions required.

Declaration of Decontamination

The undersigned herewith declare that the following pump and its accessories are harmless and ask you to service and/or repair it or them.

Type:

.....

.....

Serial number:

.....

Date of delivery:

.....

Kind of problem:

.....

.....

<u>Declaration:</u>

The pump was not used to deliver harmful or noxious substances

☐ but with the following fluids:

.....

.....

☐ Before being shipped, the pump was carefully emptied and cleaned inside and outside.

☐ There are no special safety precautions required.

☐ It is necessary to take the following safety precautions with regard to residual fluids and waste disposal:

.....

.....

Date: Signature:

SONDERMANN
Pumpen + Filter GmbH & Co. KG
August-Horch-Strasse 2
51149 Cologne (Porz), Germany

Phone: +49(0)2203 93940
Fax: +49(0)2203 939 448

info@sondermann-pumpen.de
www.sondermann-pumpen.de

© 2017 SONDERMANN Pumpen + Filter GmbH & Co. KG

Version 03 of Jan 2019; English version of the German original Operating Manual – Subject to technical modifications
BA-MA4-7; 0,5-E

This operating manual is protected by copyright and must not be copied nor transmitted or used in any form or by any means in full or in parts, unless explicitly authorized in writing by SONDERMANN Pumpen + Filter GmbH & Co. KG.